GROVE

GMK7550

product guide

features

- 550 ton (450 mton) capacity
- 197 ft (60 m) 5 section full power boom
- Patented TWIN-LOCK™ boom pinning system
- 82 ft - 240 ft (25 m - 73 m) lattice luffing jib
- 39 ft - 230 ft (12 m - 70 m) fixed lattice jib
- 430 ft (131 m) overall tip height
- Grove MEGAFORM boom
- New control console with EKS5 and ECOS
- Right side mounted cab stows to the rear
- Superstructure cab tilts up to approx 20°
- 264,500 lbs (120 Tonnes) hydraulically installed/removed counterweight
- 255 hp (190 kW) Mercedes OM906LA diesel, water cooled superstructure engine
- 563 hp (420 kW) Mercedes, diesel, water-cooled turbocharged carrier engine
- 53 mph (85 km/h) travel speed
- Boom removal and trailing boom kits (less dolly)
- Self removable rear outrigger box
- Optional 8th axle
- MEGATRAK™ independent suspension system

contents

Features	2
Specifications	3
Dimensions	5
Jib Dimensions	6
Counterweight Dimensions	8
Travel Proposals	9
Main Boom Range/Charts	11
Luffing Jib Range/Charts	14
Fixed Lattice Extension	25
Special Offset Fixed Lattice Extension	28
Heavy Duty Jib Extension	31

All Terrain Crane

Manitowoc Crane Group

features

The operator's cab on the GMK7550 uses the new EKS5 LMI system and ECOS (Electronic Crane Operating System) with a combined dual screen display mounted on a tiltable swing arm.

The Mercedes OM 502 LA, 8 cylinder carrier engine provides 563 (420 kW) horsepower.

The superstructure is powered by a Mercedes OM906 LA 6 cylinder 255 horsepower (190 kW) engine.

The new superstructure cab stows to the rear and swings hydraulically to the right side of the crane for operation. Stationary heating and A/C are standard.

A sturdy 240 ft. (73 m) luffing jib on 179 ft. (54,6 m) of main boom provides up to 410 ft. (125 m) max tip ht with approximately 295 ft. (90 m) of working radius.

The TWIN-LOCK boom pinning system-a Grove patented design - runs inside a five section MEGAFORM boom.

The exclusive Grove MEGATRAK™ independent suspension system allows all wheels to be on the ground at all times, now with top steering on rear axles.

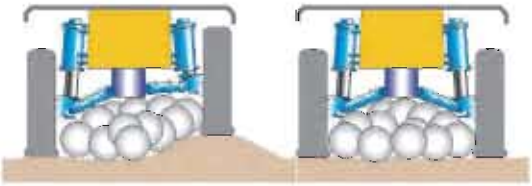

The rear outrigger box can be removed and replaced with an 8th axle for travel situations demanding additional axle weight distribution, (shown below with optional aluminum wheels).

Superstructure

Boom

53 ft. - 197 ft. (16 m - 60 m) five section, full power boom with patented TWIN-LOCK™ boom pinning system. Maximum tip height: 207 ft. (63 m).

Boom Elevation

Two lift cylinders with safety valves provide boom angles from -3° to +82°.

Lattice Jib

Luffing jib is a lattice design with lengths of 82 ft. -240 ft. (25 m - 73 m) in sections of 20 ft. (6 m). The luffing jib converts to a fixed offset lattice jib providing lengths of 39 ft. -230 ft. (12 m - 70 m) offsettable at 3° and 25°.

Load Moment & Anti-Two Block System

Graphic display load moment and anti-two block system with audio/visual warning and control lever lockout. These systems provide electronic display of boom angle, length, radius, tip height, relative load moment, maximum permissible load, load indication and warning of impending two-block condition.

Cab

All aluminum construction cab is tiltable (approximately 20°) and includes safety glass and adjustable operator's seat with hydraulic suspension. Other features include engine dependent hot water heater, air conditioning, armrest integrated crane controls, and ergonomically arranged instrumentation. Cab hydraulically stows to the rear of the superstructure for highway travel.

Swing

3 axial piston fixed displacement motors provide swing speed of 0 - 1 RPM thru planetary gear box. Also provided is a spring applied, hydraulically released automatic swing brake with foot operated release for free swing.

Counterweight

264,500 lbs. (120 Tonnes) consisting of various sections with hydraulic installation/removal system (see counterweight configuration on page 8).

Engine

Mercedes OM906LA, diesel, 6 cylinders, water cooled, turbocharged, 255 HP (190 kW) at 1800 rpm. Max. torque: 811 ft./lbs. (1100 Nm) at 1300 rpm. Engine emission: EUROMOT/EPA/CARB (off highway).

Fuel Tank Capacity

79 gal. (300 L).

Hydraulic System

5 separate circuits, 3 axial piston variable displacement pumps with electronic power limiting control, 1 axial piston variable displacement pump for slewing and 1 fixed displacement pump for auxiliary gears. Standard thermostatically controlled oil cooler keeps oil at optimum operating temperature. Tank capacity: 428 gal. (1620 L)

Control system

Full electronic control of all crane movements is accomplished using electrical control levers with automatic reset to zero. Controls are integrated with the LMI and engine management system by CAN-BUS.

Hoist

Main and auxiliary hoist are powered by axial piston variable displacement motor with planetary gear and brake. "Thumb-thumper" hoist drum rotation indicator alerts operator of hoist movement.

	Main Auxiliary	Auxiliary
Line length:	1509 ft. (460 m)	2,264 ft. (690 m)
Rope diameter:	24 mm	24 mm
Line speed:	443 ft/min (135 m/min)	443 ft/min (135 m/min)
Line pull:	24,729 lbs. (110 kN)	24,729 lbs. (110 kN)

Electrical system

24 V system with three-phase alternator 28 V/100 A
2 batteries 12 V/170 Ah.

* Optional equipment

* Engine-independent hot water heater, with engine pre-heater
* Second spotlight
* Stereo/CD player
* Lift enhancement system
* 360° positive swing lock

* Denotes optional equipment

specifications

Carrier

Chassis

Special 7 axle carrier, welded torsion resistant frame is fabricated from high-strength steel.

Outrigger System

Hydraulic two-stage outrigger beams are extended by a single hydraulic cylinder and two cables. Outriggers can adjust to two positions:

Fully extended (100%) - 29' 2" (8.9 m)
Partially extended (50%) - 20' (6.1 m)

Four 32 in. x 32 in. (810 mm x 810 mm), self stowing, steel outrigger pads provide rigid lifting base. Outrigger controls are located on both sides of the carrier. Electronic level indicators are located next to each outrigger control box. Outrigger pad load indication through ECOS and carrier controls.

Engine

Mercedes, diesel, 8 cylinders, water-cooled, turbocharged, 563 HP (420 kW) at 1800 rpm.
Max. torque: 1991 ft. lbs. (2700 Nm) at 1080 rpm.
Engine emission: EPA/CARB (non highway).

Fuel Tank Capacity

132 gal. (500 L).

Transmission

Allison automatic HD 4076, 7 forward and 1 reverse speed. Transfer case with 2 speeds and inter-axle differential lock.

Drive/Steer

14 x 6 x 14.

Axles

7 axles. 1, 4 and 5 are drive/steer. Axles 2, 3, 6 and 7 are steer only.

Suspension

GMK7550 features the Grove exclusive MEGATRAK™ suspension. This revolutionary design features an independent hydroneumatic system with hydraulic lockout acting on all wheels. The suspension can be raised 6-1/2" (170 mm) or lowered 5" (130 mm) both longitudinally and transversely and features an automatic leveling system for on-highway travel.

Tires

14 tires, 20.5 R25.

Steering

Dual circuit steering system is hydraulic power assisted with emergency steering pump.
Axles 1, 2, 3, 6 and 7steer on highway.
Separate steering of the 4th, 5th,6th and 7th axles for all wheel steer and crab-steer, controlled by an electric rocker switch.

Brakes

A dual circuit air system operates on all wheels with a spring-applied, air released parking brake acting on axles 2, 4, 5 and 7. An air dryer is fitted to remove moisture from the air system. Standard engine compression brake and transmission retarder.

Cab

Two-man, aluminum construction driver's cab includes the following features: safety glass; driver and passenger seats with hydraulic suspension, engine-dependent hot water heater and air conditioning. Complete instrumentation and driving controls.

Electrical System

24 V system with three-phase alternator 28 V/100 A, 2 batteries 12 V/170 Ah.

Maximum Speed

53 mph (85 km/h) with 20.5 R25 tires.

Gradeability (theoretical)

32% with 20.5 R25 tires. (14x6x14)
50% with 20.5 R25 tires. (14x8x14)

Miscellaneous Standard Equipment

Boom removal kit; trailing boom kit (less dolly), additional hydraulic oil cooler; removable rear outrigger box, spare tire and wheel; tool kit; fire extinguisher; radio/cassette player in carrier cab.

* Optional Equipment

* 14 x 8 x 14 (1,2,4 and 5 are drive/steer)
* Engine-independent hot water heater, with engine pre-heater
* Tachograph

** Denotes optional equipment*

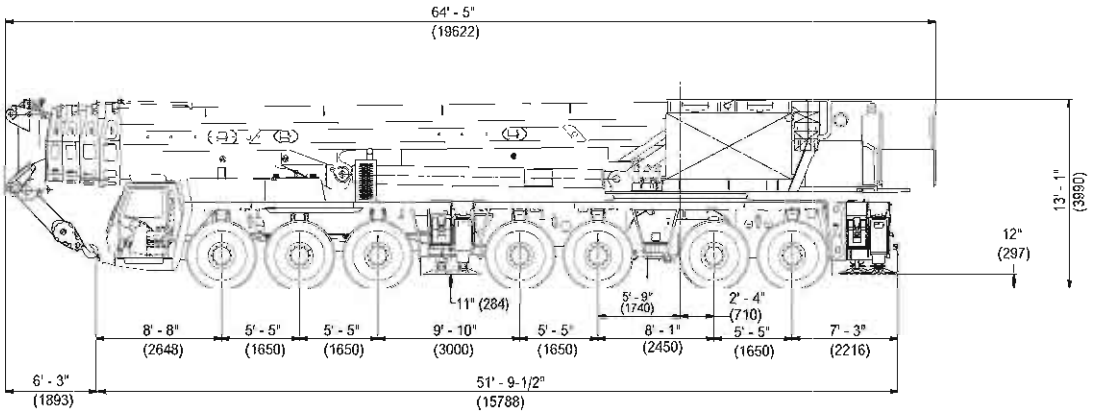

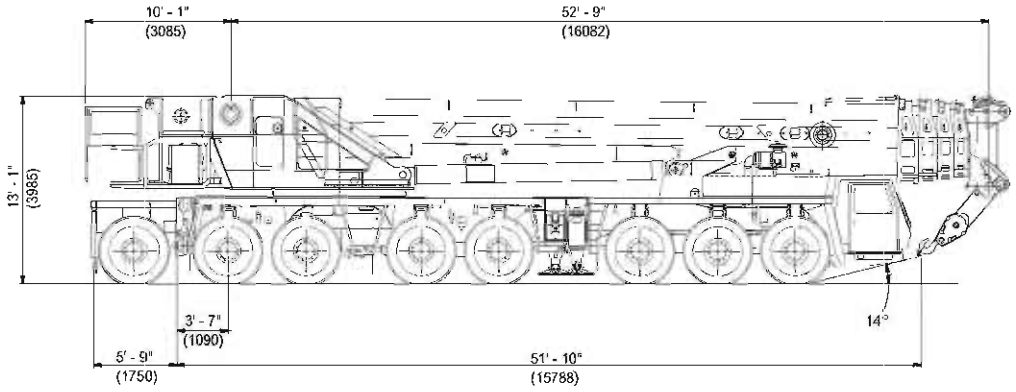

Shown with
8th axle

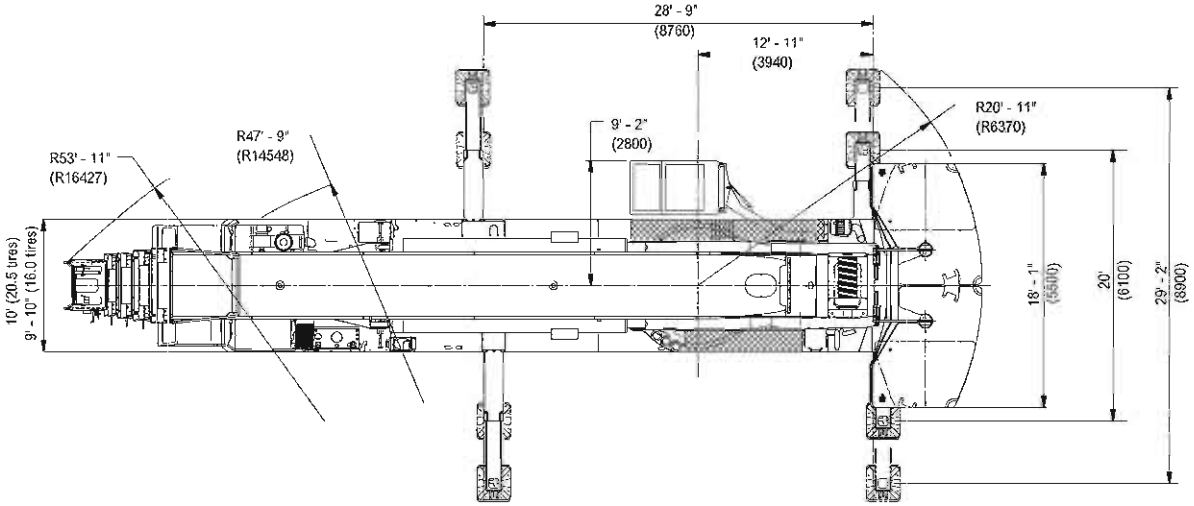

dimensions

Luffing jib combinations

without angle offset

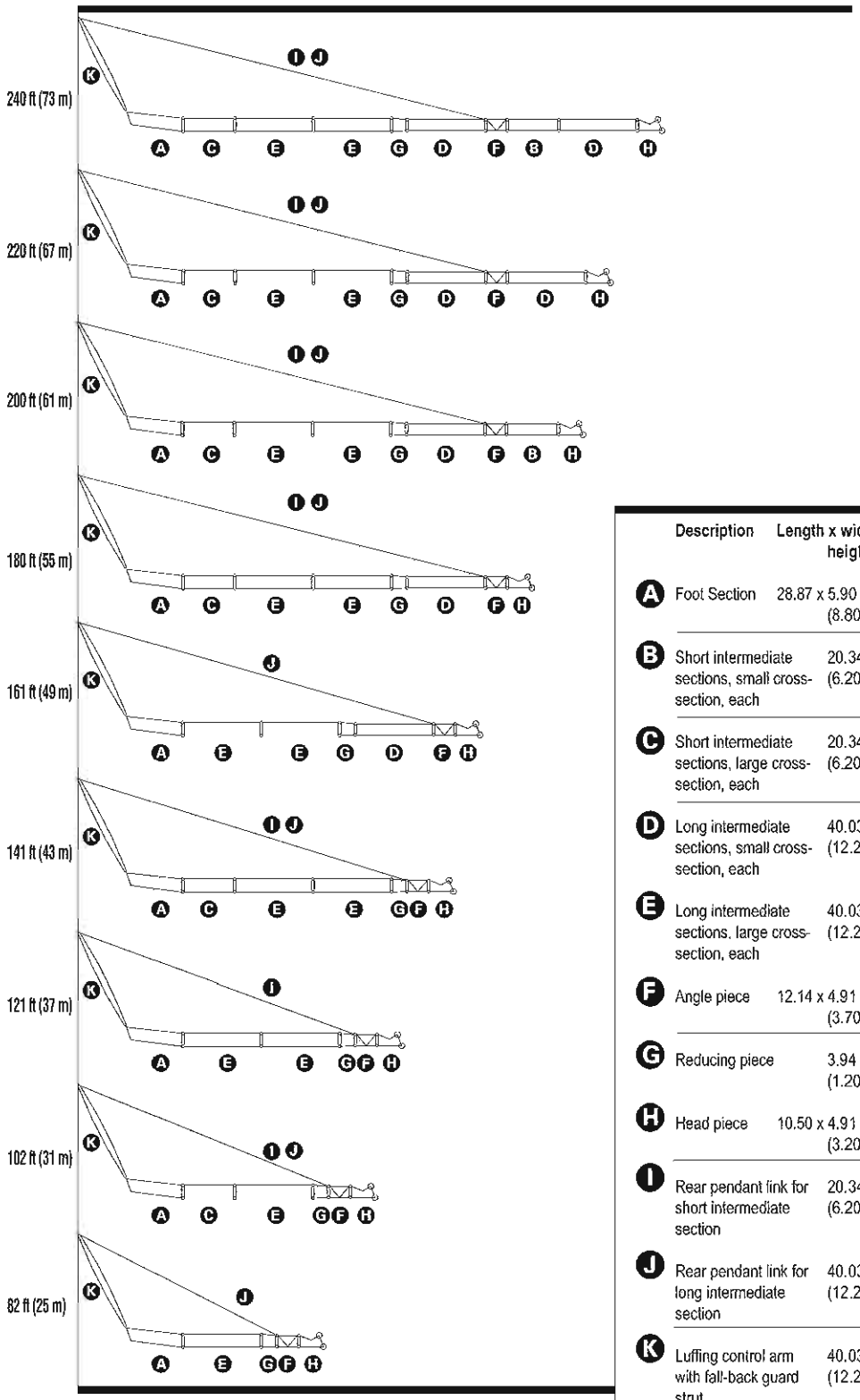

	Description	Length x width x height in ft (m)	Weight in lbs. (m)
A	Foot Section	28.87 x 5.90 x 8.20 (8.80 x 1.80 x 2.50)	8 160 (3 700)
B	Short intermediate sections, small cross-section, each	20.34 x 4.91 x 4.91 (6.20 x 1.50 x 1.50)	1 985 (900)
C	Short intermediate sections, large cross-section, each	20.34 x 5.90 X 6.23 (6.20 x 1.80 x 1.90)	2 205 (1 000)
D	Long intermediate sections, small cross-section, each	40.03 x 4.91 x 4.91 (12.20 x 1.50 x 1.50)	3 530 (1 600)
E	Long intermediate sections, large cross-section, each	40.03 x 5.90 x 6.23 (12.20 x 1.80 x 1.90)	3 530 (1 600)
F	Angle piece	12.14 x 4.91 x 5.90 (3.70 x 1.50 x 1.80)	3 530 (1 600)
G	Reducing piece	3.94 x 5.90 x 6.23 (1.20 x 1.80 x 1.90)	1 105 (500)
H	Head piece	10.50 x 4.91 x 6.89 (3.20 x 1.50 x 2.10)	2 650 (1 200)
I	Rear pendant link for short intermediate section	20.34 x 0.70 x 0.70 (6.20 x 0.20 x 0.20)	440 (200)
J	Rear pendant link for long intermediate section	40.03 x 0.70 x 0.70 (12.20 x 0.20 x 0.20)	880 (400)
K	Luffing control arm with fall-back guard strut	40.03 x 6.89 x 5.90 (12.20 x 2.10 x 1.80)	*7 055 (3 200)

** Individual weight of rear pendant link: 795 lbs. (360 kg)*

Lattice boom extension combinations

without angle offset

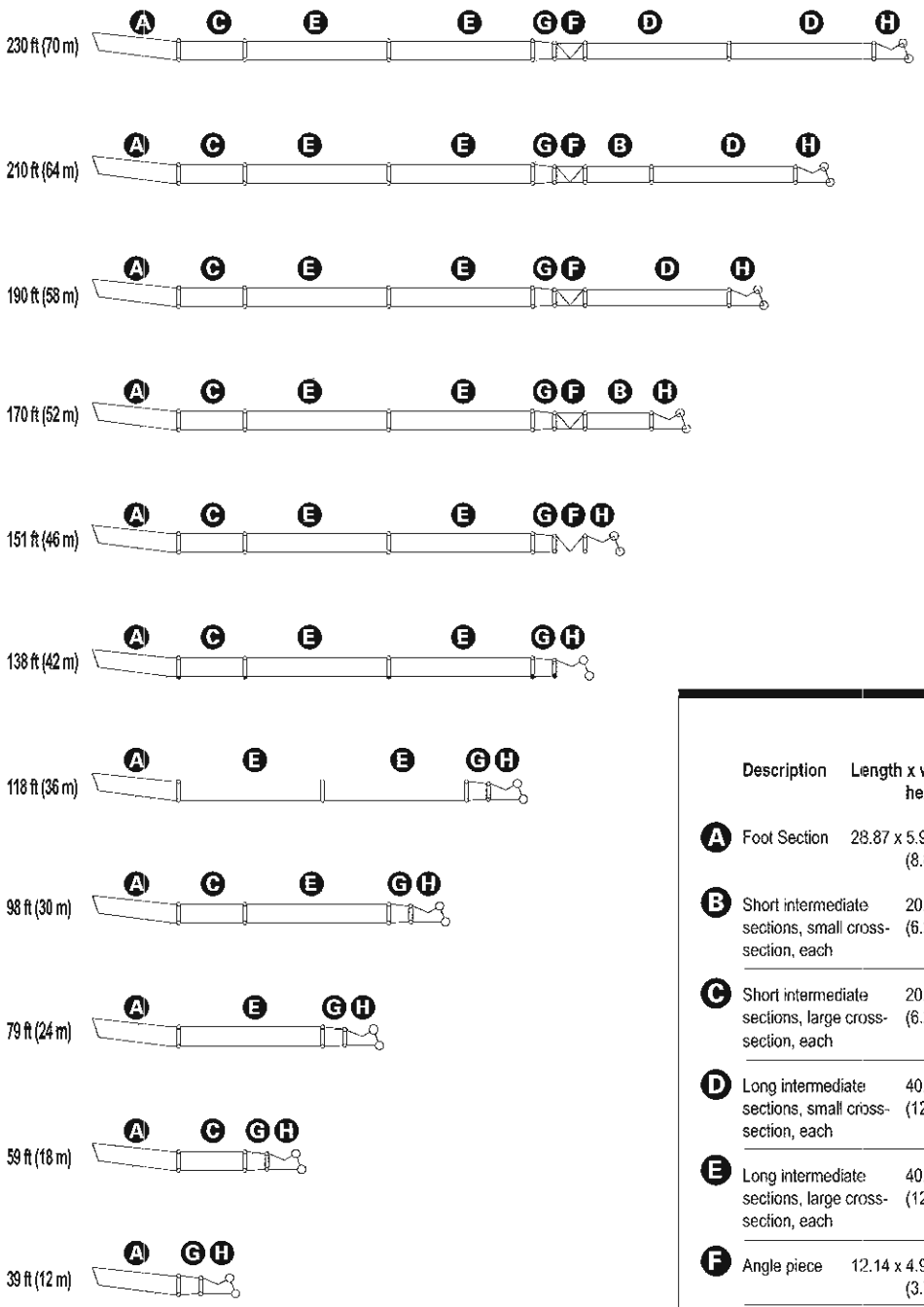

	Description	Length x width x height in ft (m)	Weight in lbs. (m)
A	Foot Section	28.87 x 5.90 x 8.20 (8.80 x 1.80 x 2.50)	8 160 (3 700)
B	Short intermediate sections, small cross-section, each	20.34 x 4.91 x 4.91 (6.20 x 1.50 x 1.50)	1 985 (900)
C	Short intermediate sections, large cross-section, each	20.34 x 5.90 X 6.23 (6.20 x 1.80 x 1.90)	2 205 (1 000)
D	Long intermediate sections, small cross-section, each	40.03 x 4.91 x 4.91 (12.20 x 1.50 x 1.50)	3 530 (1 600)
E	Long intermediate sections, large cross-section, each	40.03 x 5.90 x 6.23 (12.20 x 1.80 x 1.90)	3 530 (1 600)
F	Angle piece	12.14 x 4.91 x 5.90 (3.70 x 1.50 x 1.80)	3 530 (1 600)
G	Reducing piece	3.94 x 5.90 x 6.23 (1.20 x 1.80 x 1.90)	1 105 (500)
H	Head piece	10.50 x 4.91 x 6.89 (3.20 x 1.50 x 2.10)	2 650 (1 200)

counterweight

264,500 lbs.

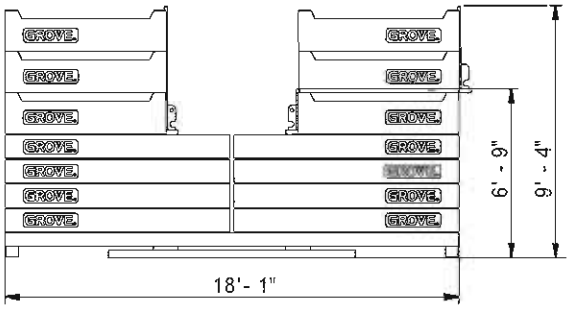

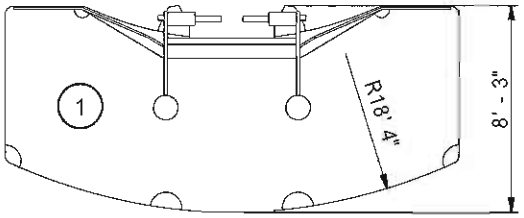

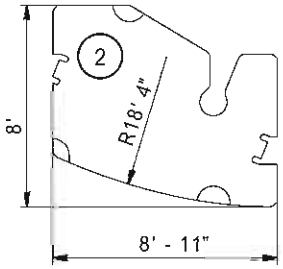

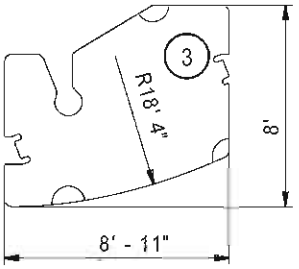

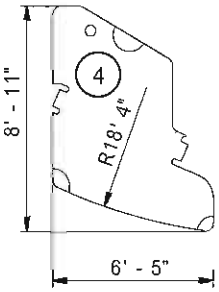

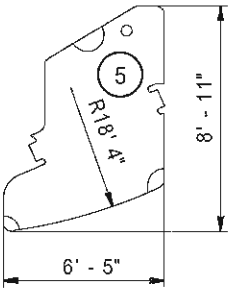

Thousand lbs.	1 44.0	2 22.0	3 22.0	4 22.0	5 22.0
44.0	x				
88.1	x	x	x		
132.2	x	2 x	2 x		
176	x	3 x	3 x		
220.4	x	4 x	4 x		
264.5	x	4 x	4 x	x	x
308.6	x	4 x	4 x	2 x	2 x
352.7	x	4 x	4 x	3 x	3 x

Trailing boom dolly with 8th axle

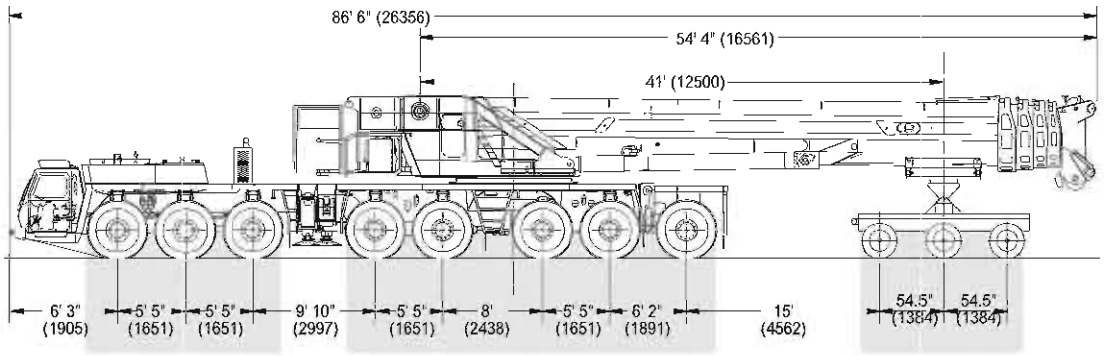

	Axles 1 - 3	Axles 4 - 8	Dolly	Total GVW
Boom in dolly over rear, rear outrigger box removed, 8th axle installed	59,094 lbs. (26 805 kg)	89,889 lbs. (40 773 kg)	51,282 lbs. (23 261 kg)	200,264 lbs. (90 839 kg)

Unit equipped with:

- 20.5 tires on aluminum rims - axles 1 through 8
- Operator, 165 lbs. (75 kg)
- Welded on MEGAWINGLIFT hardware
- Dolly weight: 8,600 lbs. (3900 kg)

Allow 2% variation in weight due to manufacturing tolerances

Boom removed, superstructure over rear

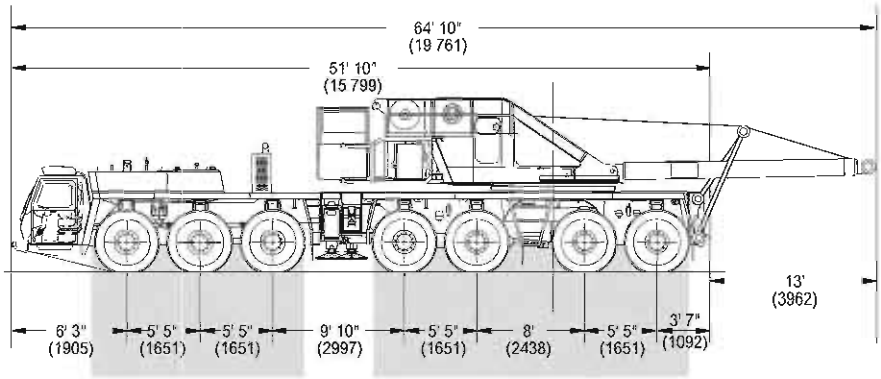

	Axles 1 - 3	Axles 4 - 7	Total GVW
Boom removed, superstructure over rear	35,456 lbs. (16 083 kg)	76,914 lbs. (34 888 kg)	112,370 lbs. (50 971 kg)

Unit equipped with:

- Rear outrigger box removed
- 20.5 tires on aluminum rims
- Operator, 165 lbs. (75 kg)

Allow 2% variation in weight due to manufacturing tolerances

travel proposals

Boom over the front

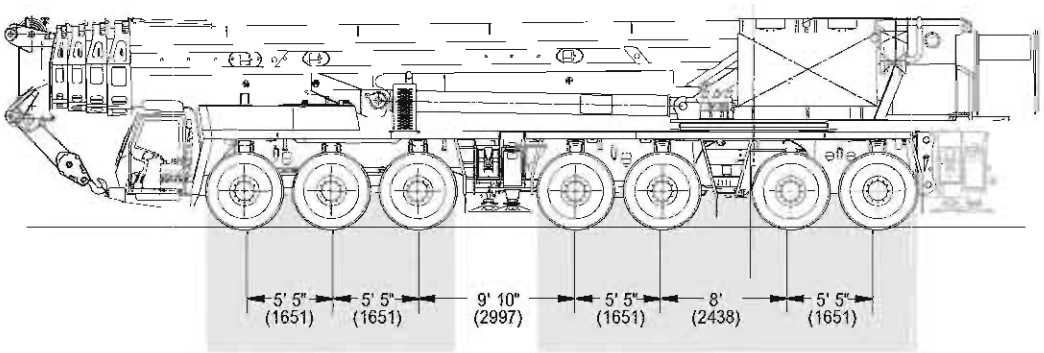

	Axles 1 - 3	Axles 4 - 7/8	Total GVW
Boom over front, rear outrigger box removed	81,768 lbs. (37 090 kg)	104,741 lbs. (47 510 kg)	186,509 lbs. (84 600 kg)
Boom over front, rear outrigger box installed	73,032 lbs. (33 127 kg)	128,311 lbs. (58 202 kg)	201,343 lbs. (91 329 kg)
Boom over front, 8th axle installed	94,607 lbs. (42 914 kg)	97,053 lbs. (44 023 kg)	191,661 lbs. (86 937 kg)

Unit equipped with:
- 20.5 tires on aluminum rims
- Operator, 165 lbs. (75 kg)
- Welded on MEGAWINGLIFT hardware

Allow 2% variation in weight due to manufacturing tolerances

Trailing boom (spread dolly) with axles 3 & 6 raised

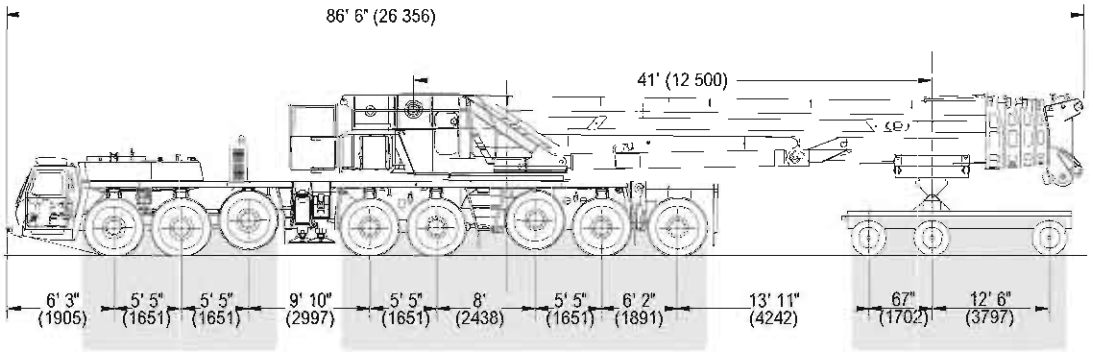

	Axles 1 - 2	Axles 4, 5, 7, 8	Dolly	Total GVW
Boom in dolly over rear, rear outrigger box removed, 8th axle installed, axles 3 & 6 raised	53,793 lbs. (24 400 kg)	95,184 lbs. (43 175 kg)	52,687 lbs. (23 900 kg)	201,664 lbs. (91 475 kg)

Unit equipped with:
- 20.5 tires on aluminum rims - axles 1 through 8
- Operator, 165 lbs. (75 kg)
- Welded on MEGAWINGLIFT hardware
- 3 axle dolly (10,000 lbs. [4563])

Allow 2% variation in weight due to manufacturing tolerances

197 ft Main Boom

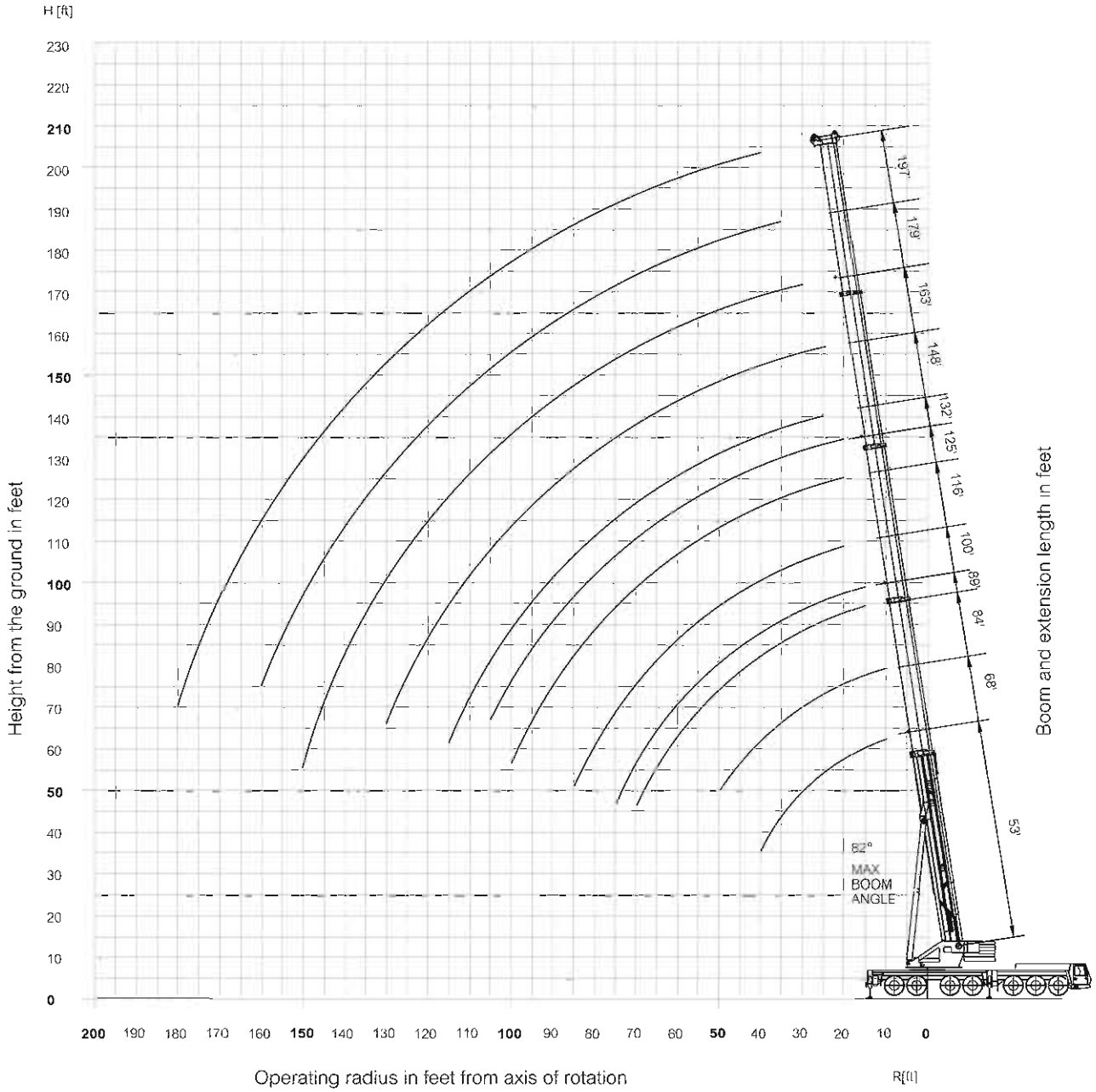

Hook height							
Rated capacities in 1000 lbs.	705.4	551.1	440.9	352.6	220.4	88.1	35
Distance H in ft	13.3	13.0	12.0	12.0	10.8	10.5	8

THIS CHART IS ONLY A GUIDE AND SHOULD NOT BE USED TO OPERATE THE CRANE. The individual crane's load chart, operating instructions and other instructional plates must be read and understood prior to operating the crane.

load charts

53 - 197 ft | 264,500 lbs. | 100% 29' 2" Spread | 360°

Pounds (thousands)

Feet	53.0	68.0	84.0	89.0	100.0	116.0	125.0	132.0	148.0	163.0	179.0	197.0
8	*788.0											
10	678.0	624.0										
15	538.0	536.0	496.0	300.0								
20	438.0	442.0	438.0	300.0	410.0	372.0	284.0					
25	370.0	374.0	374.0	300.0	368.0	346.0	256.0	254.0				
30	318.0	320.0	320.0	298.0	318.0	316.0	232.0	228.0	204.0	181.0		
35	276.0	280.0	280.0	270.0	278.0	282.0	206.0	207.0	186.0	168.0	146.0	
40	242.0	244.0	246.0	238.0	244.0	246.0	187.0	186.0	168.0	155.0	141.0	123.0
45		215.0	216.0	209.0	219.0	217.0	170.0	170.0	154.0	142.0	131.0	119.0
50		191.0	196.0	185.0	195.0	193.0	154.0	155.0	141.0	131.0	122.0	112.0
55			176.0	165.0	175.0	174.0	143.0	145.0	129.0	121.0	114.0	105.0
60			159.0	147.0	159.0	157.0	132.0	136.0	120.0	111.0	106.0	98.0
65			144.0	136.0	144.0	142.0	121.0	128.0	111.0	104.0	98.0	92.0
70			131.0	122.0	130.0	127.0	111.0	119.0	102.0	97.0	92.0	86.0
75				109.0	117.0	114.0	104.0	113.0	96.0	90.0	87.0	80.0
80					106.0	104.0	95.0	107.0	90.0	83.0	81.0	76.0
85					97.0	94.0	86.0	98.0	84.0	79.0	75.0	72.0
90						87.0	78.0	90.0	79.0	75.0	71.0	67.0
95						84.0	70.0	82.0	75.0	70.0	68.0	63.0
100						79.0	64.0	76.0	72.0	66.0	64.0	60.0
105							59.0	70.0	69.0	62.0	60.0	57.0
110							56.0	65.0	66.0	59.0	56.0	54.0
115								61.0	62.0	56.0	53.0	51.0
120									57.0	52.0	51.0	47.0
125									54.0	49.0	49.0	45.0
130									50.0	47.0	46.0	43.4
135										46.0	44.0	41.4
140										43.4	41.2	39.6
145										40.6	38.6	37.6
150										38.2	36.0	35.8
155											33.6	33.8
160											31.4	31.6
165												29.4
170												27.6
175												25.8
180												24.2
185												

Loads > 420,000 lb can only be lifted with additional equipment
* Over rear, 20 ft. outrigger span

53 - 197 ft | 220,400 lbs. | 100% 29' 2" Spread | 360°

Pounds (thousands)

Feet	53.0	68.0	84.0	89.0	100.0	116.0	125.0	132.0	148.0	163.0	179.0	197.0
8	*788.0											
10	664.0	624.0										
15	526.0	524.0	496.0	300.0								
20	428.0	432.0	432.0	300.0	410.0	372.0	284.0					
25	360.0	364.0	364.0	300.0	362.0	346.0	256.0	254.0				
30	308.0	312.0	312.0	298.0	310.0	314.0	232.0	228.0	204.0	181.0		
35	264.0	268.0	268.0	262.0	272.0	270.0	206.0	207.0	186.0	168.0	146.0	
40	228.0	232.0	236.0	226.0	236.0	234.0	187.0	186.0	168.0	155.0	141.0	123.0
45		206.0	208.0	196.0	207.0	205.0	170.0	170.0	154.0	142.0	131.0	119.0
50		180.0	183.0	172.0	183.0	180.0	154.0	155.0	141.0	131.0	122.0	112.0
55			159.0	150.0	158.0	155.0	143.0	145.0	129.0	121.0	114.0	105.0
60			139.0	130.0	139.0	136.0	127.0	136.0	120.0	111.0	106.0	98.0
65			123.0	115.0	123.0	120.0	111.0	124.0	111.0	104.0	98.0	92.0
70			110.0	108.0	109.0	109.0	98.0	111.0	102.0	97.0	92.0	86.0
75				96.0	98.0	102.0	87.0	99.0	94.0	90.0	87.0	80.0
80					89.0	93.0	80.0	90.0	88.0	83.0	81.0	76.0
85					81.0	84.0	75.0	82.0	83.0	78.0	75.0	72.0
90						77.0	70.0	74.0	76.0	71.0	71.0	67.0
95						71.0	65.0	68.0	69.0	67.0	67.0	63.0
100						65.0	60.0	64.0	64.0	63.0	61.0	60.0
105							55.0	61.0	59.0	58.0	56.0	56.0
110							50.0	57.0	54.0	54.0	52.0	52.0
115								53.0	50.0	49.0	48.0	48.0
120									46.0	46.0	43.8	44.0
125									44.0	42.4	40.4	40.6
130									41.2	39.4	37.4	37.6
135										36.4	34.6	34.6
140										34.0	32.0	32.0
145										31.6	29.6	29.6
150										29.4	27.2	27.4
155											25.2	25.4
160											23.4	23.4
165												21.6
170												20.0
175												18.4
180												17.0

Loads > 420,000 lb can only be lifted with additional equipment
* Over rear, 20 ft. outrigger span

GROVE

THIS CHART IS ONLY A GUIDE AND SHOULD NOT BE USED TO OPERATE THE CRANE. The individual crane's load chart, operating instructions and other instructional plates must be read and understood prior to operating the crane.

53 - 197 ft | 176,300 lbs. | 100% | 360°

29' 2" Spread

Pounds (thousands)

Feet	53.0	68.0	84.0	89.0	100.0	116.0	125.0	132.0	148.0	163.0	179.0	197.0
8	*788.0											
10	650.0	624.0										
15	512.0	514.0	496.0	300.0								
20	418.0	420.0	420.0	300.0	410.0	372.0	284.0					
25	352.0	354.0	354.0	300.0	352.0	346.0	256.0	254.0				
30	294.0	298.0	298.0	290.0	300.0	296.0	232.0	228.0	204.0	181.0		
35	250.0	252.0	258.0	246.0	256.0	242.0	206.0	207.0	186.0	168.0	146.0	
40	203.0	213.0	216.0	206.0	215.0	203.0	187.0	186.0	168.0	155.0	141.0	123.0
45		176.0	180.0	170.0	179.0	174.0	160.0	168.0	154.0	142.0	131.0	119.0
50		149.0	153.0	143.0	152.0	149.0	138.0	150.0	139.0	131.0	122.0	112.0
55			131.0	129.0	131.0	133.0	119.0	131.0	121.0	119.0	114.0	105.0
60			115.0	112.0	114.0	118.0	107.0	115.0	112.0	105.0	105.0	98.0
65			103.0	98.0	100.0	105.0	98.0	102.0	102.0	96.0	94.0	92.0
70			91.0	91.0	94.0	93.0	87.0	90.0	92.0	89.0	85.0	83.0
75				83.0	85.0	84.0	78.0	84.0	82.0	81.0	77.0	75.0
80					76.0	75.0	70.0	77.0	74.0	73.0	70.0	68.0
85					69.0	68.0	62.0	69.0	68.0	66.0	63.0	62.0
90						63.0	58.0	63.0	62.0	60.0	58.0	56.0
95						58.0	55.0	58.0	56.0	54.0	53.0	52.0
100						53.0	53.0	53.0	51.0	50.0	48.0	47.0
105							49.0	48.0	47.0	45.0	43.4	43.6
110							46.0	45.0	43.2	41.4	39.4	39.6
115								41.0	39.6	37.8	36.0	36.2
120									36.4	34.6	32.8	33.0
125									33.6	31.8	29.8	30.0
130									31.0	29.2	27.2	27.4
135										26.8	24.8	25.0
140										24.6	22.6	22.6
145										22.6	20.4	20.6
150										20.8	18.6	18.6
155											16.8	17.0
160											15.2	15.2
165												13.8
170												12.4
175												11.0
180												9.8

Loads > 420,000 lb can only be lifted with additional equipment
* Over rear, 20 ft. outrigger span

53 - 197 ft | 132,200 lbs. | 100% | 360°

29' 2" Spread

Pounds (thousands)

Feet	53.0	68.0	84.0	89.0	100.0	116.0	125.0	132.0	148.0	163.0	179.0	197.0
10	634.0	624.0										
15	500.0	500.0	496.0	300.0								
20	406.0	410.0	410.0	300.0	408.0	372.0	284.0					
25	336.0	340.0	340.0	300.0	338.0	314.0	256.0	254.0				
30	288.0	276.0	278.0	254.0	262.0	244.0	226.0	228.0	204.0	181.0		
35	205.0	215.0	219.0	208.0	212.0	199.0	182.0	194.0	179.0	168.0	146.0	
40	162.0	171.0	175.0	172.0	174.0	170.0	151.0	161.0	150.0	143.0	141.0	123.0
45		141.0	145.0	142.0	144.0	145.0	135.0	136.0	133.0	127.0	121.0	116.0
50		118.0	124.0	119.0	126.0	125.0	115.0	119.0	114.0	110.0	104.0	101.0
55			106.0	107.0	109.0	108.0	100.0	106.0	101.0	96.0	91.0	88.0
60			92.0	93.0	95.0	94.0	88.0	94.0	89.0	85.0	80.0	78.0
65			81.0	82.0	83.0	84.0	81.0	83.0	79.0	75.0	71.0	69.0
70			71.0	72.0	74.0	74.0	75.0	74.0	71.0	67.0	63.0	61.0
75				64.0	66.0	66.0	67.0	68.0	64.0	60.0	56.0	55.0
80					59.0	59.0	60.0	59.0	58.0	54.0	51.0	49.0
85					53.0	53.0	54.0	53.0	52.0	49.0	46.0	44.0
90						48.0	49.0	48.0	46.0	44.0	41.0	40.0
95						43.6	44.0	43.2	41.8	40.0	37.0	36.2
100						39.6	40.2	39.2	37.8	36.0	33.4	32.6
105							36.6	35.6	34.2	32.4	30.2	29.4
110							33.2	32.2	30.8	29.0	27.2	26.6
115								29.2	27.8	26.0	24.2	24.0
120									25.2	23.4	21.6	21.6
125									22.8	21.0	19.2	19.2
130									20.6	18.8	16.8	17.0
135										16.8	14.8	15.0
140										15.0	13.0	13.2
145										13.4	11.2	11.4
150										11.8	9.8	9.8
155											8.2	8.4
160											7.0	7.0
165												5.8
170												4.6
175												3.6

Loads > 420,000 lb can only be lifted with additional equipment

53 - 197 ft | 0 lbs. | 100% | 360°

29' 2" Spread

Pounds (thousands)

Feet	53.0	68.0	84.0	89.0	100.0	116.0	125.0	132.0	148.0
10	586.0	584.0							
15	440.0	366.0	302.0	278.0					
20	199.0	180.0	163.0	159.0	146.0	130.0	124.0		
25	114.0	111.0	106.0	104.0	99.0	90.0	87.0	81.0	53.0
30	72.0	75.0	74.0	73.0	71.0	66.0	64.0	60.0	40.2
35	49.0	53.0	54.0	54.0	53.0	50.0	49.0	45.0	30.6
40	34.0	38.8	40.6	41.0	40.4	38.2	37.6	34.8	23.4
45		28.2	30.8	31.4	31.4	29.8	29.4	27.0	17.6
50		20.6	23.4	24.0	24.4	23.0	23.0	20.8	13.0
55			17.6	18.2	18.8	17.8	17.8	16.0	9.2
60			13.0	13.6	14.2	13.6	13.6	11.8	6.0
65			9.2	9.8	10.6	10.0	10.2	8.4	
70			6.8	6.8	7.6	7.0	7.2	5.6	
75				4.0	5.0	4.4	4.8		

THIS CHART IS ONLY A GUIDE AND SHOULD NOT BE USED TO OPERATE THE CRANE. The individual crane's load chart, operating instructions and other instructional plates must be read and understood prior to operating the crane.

Working Range
w/MegaWingLift

197 ft. Main Boom

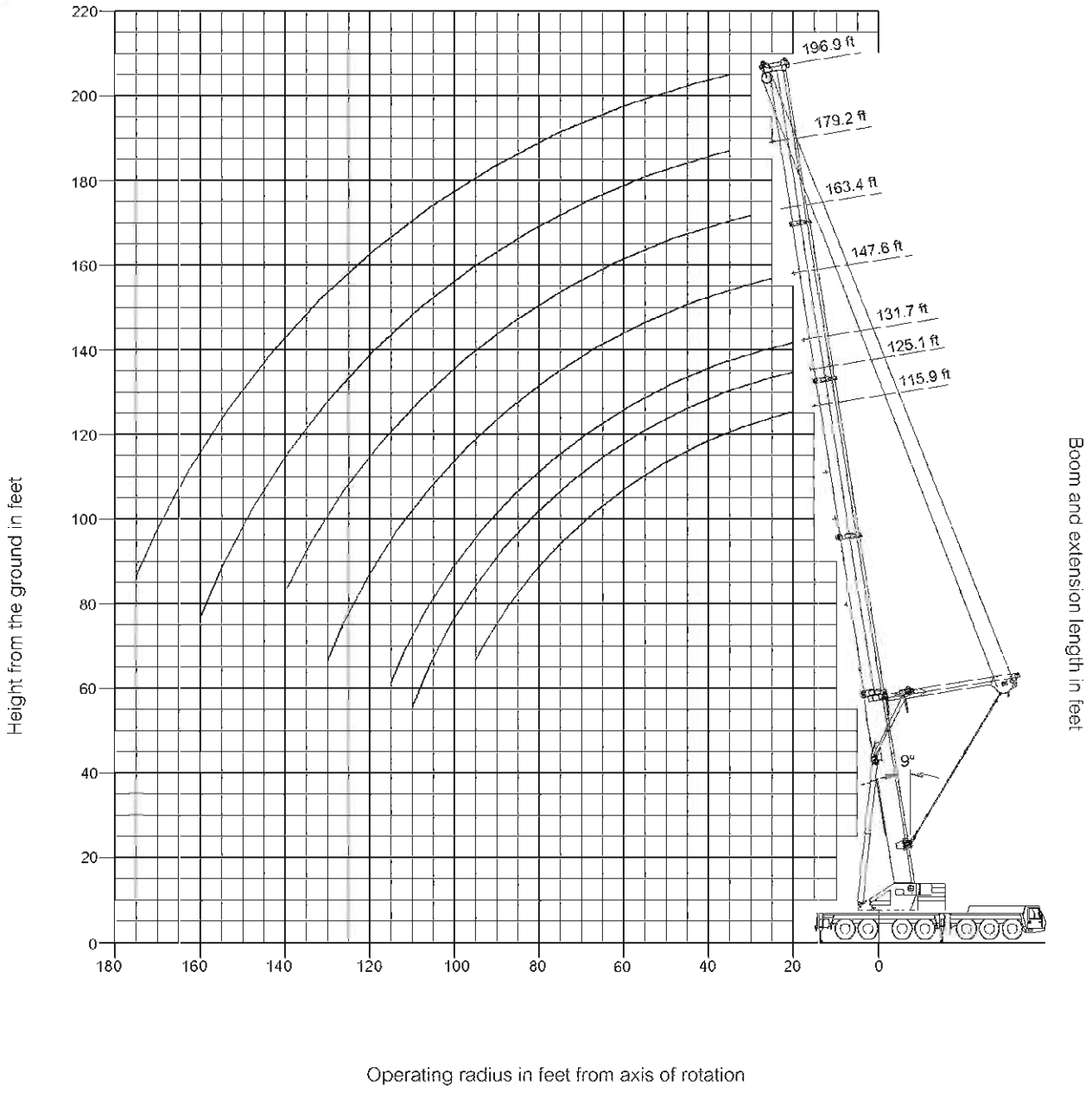

THIS CHART IS ONLY A GUIDE AND SHOULD NOT BE USED TO OPERATE THE CRANE. The individual crane's load chart, operating instructions and other instructional plates must be read and understood prior to operating the crane.

116-197 ft. | 352,700 lbs. | 100% 29'-2" spread | 360°

Pounds (thousands)

Feet	116'	125'	132'	148'	163'	179'	197'
20	352.0	270.0	330.0				
25	324.0	254.0	310.0	298.0			
30	298.0	242.0	280.0	268.0	222.0	213.0	
35	274.0	230.0	258.0	244.0	211.0	200.0	167.0
40	242.0	219.0	240.0	226.0	200.0	186.0	158.0
45	222.0	209.0	219.0	212.0	190.0	175.0	149.0
50	200.0	195.0	197.0	193.0	181.0	164.0	142.0
55	182.0	180.0	181.0	175.0	172.0	154.0	134.0
60	166.0	167.0	166.0	163.0	161.0	146.0	127.0
65	153.0	153.0	153.0	152.0	147.0	138.0	121.0
70	140.0	141.0	140.0	139.0	138.0	130.0	115.0
75	129.0	130.0	129.0	128.0	127.0	124.0	110.0
80	120.0	120.0	120.0	119.0	118.0	116.0	104.0
85	111.0	112.0	111.0	110.0	109.0	108.0	100.0
90	104.0	104.0	104.0	103.0	102.0	100.0	96.0
95	97.0	97.0	97.0	96.0	95.0	93.0	91.0
100		91.0	91.0	90.0	89.0	87.0	87.0
105		86.0	85.0	84.0	83.0	82.0	82.0
110		73.0	80.0	79.0	78.0	77.0	77.0
115			71.0	75.0	73.0	72.0	72.0
120				70.0	69.0	68.0	68.0
125				67.0	65.0	63.0	64.0
130				58.0	61.0	60.0	60.0
135					58.0	56.0	56.0
140					54.0	53.0	53.0
145						49.0	50.0
150						46.0	47.0
155						43.6	44.0
160						38.4	41.4
165							39.0
170							36.8
175							33.8

THIS CHART IS ONLY A GUIDE AND SHOULD NOT BE USED TO OPERATE THE CRANE. The individual crane's load chart, operating instructions and other instructional plates must be read and understood prior to operating the crane.

GROVE

load charts
w/MegaWingLift

116-197 ft. | 264,500 lbs. | 100% 29'-2" spread | 360°

Pounds (thousands)

Feet	116'	125'	132'	148'	163'	179'	197'
20	352.0	270.0	330.0				
25	324.0	254.0	310.0	298.0			
30	298.0	242.0	280.0	268.0	222.0	213.0	
35	260.0	230.0	258.0	244.0	211.0	200.0	167.0
40	236.0	219.0	232.0	226.0	200.0	186.0	158.0
45	208.0	204.0	206.0	202.0	190.0	175.0	149.0
50	185.0	186.0	186.0	185.0	180.0	164.0	142.0
55	167.0	167.0	167.0	166.0	165.0	154.0	134.0
60	151.0	152.0	151.0	150.0	149.0	146.0	127.0
65	137.0	138.0	138.0	137.0	136.0	134.0	121.0
70	125.0	126.0	125.0	124.0	123.0	122.0	115.0
75	115.0	115.0	115.0	114.0	112.0	111.0	110.0
80	104.0	105.0	104.0	103.0	102.0	100.0	100.0
85	94.0	95.0	95.0	93.0	92.0	90.0	91.0
90	86.0	87.0	86.0	85.0	84.0	82.0	83.0
95	79.0	80.0	79.0	78.0	77.0	75.0	76.0
100		74.0	73.0	72.0	71.0	69.0	69.0
105		68.0	67.0	66.0	65.0	63.0	64.0
110		63.0	63.0	61.0	60.0	58.0	59.0
115			58.0	57.0	56.0	54.0	54.0
120				53.0	52.0	50.0	50.0
125				49.0	48.0	46.0	46.0
130				46.0	45.0	42.8	43.0
135					41.4	39.6	40.0
140					38.6	36.8	37.2
145						34.2	34.4
150						31.8	32.0
155						29.6	29.8
160						27.6	27.6
165							25.8
170							23.8
175							22.2

THIS CHART IS ONLY A GUIDE AND SHOULD NOT BE USED TO OPERATE THE CRANE. The individual crane's load chart, operating instructions and other instructional plates must be read and understood prior to operating the crane.

Length and Type of Boom

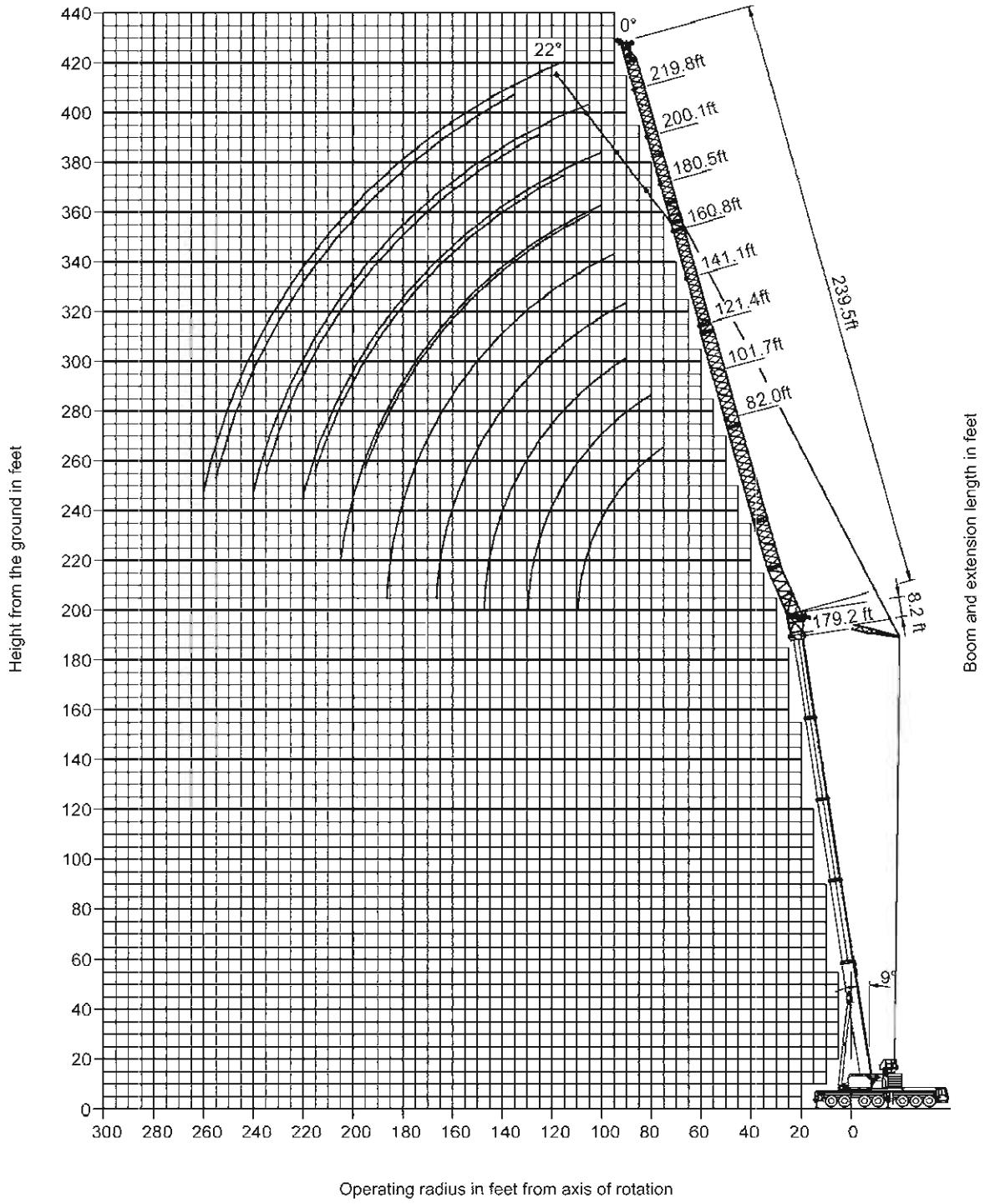

THIS CHART IS ONLY A GUIDE AND SHOULD NOT BE USED TO OPERATE THE CRANE. The individual crane's load chart, operating instructions and other instructional plates must be read and understood prior to operating the crane.

load charts

81°
52.6 ft.

82-240 ft.

100%
29' 2" Spread

360°

264,500 lbs.

Pounds (thousands)

Feet	82	101.7	121.4	141.1	160.8	180.5	200.1	219.8	239.5
40	160.0	144.0							
45	160.0	140.0							
50	151.0	136.0	114.0	92.0					
55	142.0	132.0	111.0	91.0					
60	134.0	129.0	109.0	89.0	73.0				
65	126.0	126.0	106.0	88.0	72.0				
70	118.0	122.0	104.0	86.0	70.0	56.0	42.6		
75	102.0	118.0	102.0	84.0	69.0	54.0	41.4	32.6	
80	86.0	108.0	99.0	83.0	67.0	53.0	40.4	31.6	23.4
85	70.0	96.0	90.0	81.0	65.0	52.0	39.2	30.8	22.8
90		86.0	83.0	80.0	64.0	50.0	38.2	29.8	22.0
95		75.0	88.0	78.0	62.0	49.0	37.2	29.0	21.4
100		65.0	80.0	76.0	61.0	47.0	36.2	28.0	20.6
105			73.0	74.0	59.0	46.0	35.2	27.0	20.0
110			66.0	71.0	58.0	45.0	34.4	26.2	19.4
115			59.0	68.0	57.0	43.6	33.4	25.2	18.8
120			51.0	62.0	56.0	42.6	32.6	24.2	18.2
125				57.0	54.0	41.6	31.8	23.2	17.6
130				51.0	53.0	40.6	31.0	22.6	17.2
135				46.0	50.0	39.6	30.2	22.0	16.6
140					47.0	38.6	29.4	21.4	16.0
145					43.2	38.0	28.4	20.8	15.4
150					39.6	37.0	27.6	20.2	15.0
155					36.2	36.2	26.6	19.6	14.6
160						35.0	25.8	19.2	14.2
165						33.4	24.8	18.6	13.8
170						31.8	24.4	18.2	13.2
175						29.6	23.8	17.6	12.8
180							23.2	17.2	12.4
185							22.6	16.8	12.0
190							22.2	16.4	11.6
195							21.6	15.8	11.2
200								15.6	11.0
205								15.2	10.6
210								14.8	10.2
215								14.4	9.8
220									9.6
225									9.2
230									9.0
235									8.6

81°
84.3 ft

82-240 ft.

100%
29' 2" Spread

360°

264,500 lbs.

Pounds (thousands)

Feet	82	101.7	121.4	141.1	160.8	180.5	200.1	219.8	239.5
40									
45	154.0								
50	145.0	125.0							
55	137.0	123.0	100.0						
60	129.0	120.0	99.0	79.0					
65	122.0	118.0	98.0	79.0					
70	117.0	116.0	97.0	79.0	63.0				
75	112.0	113.0	95.0	78.0	62.0	49.0	38.4		
80	107.0	111.0	93.0	77.0	61.0	48.0	37.6	29.6	
85	100.0	109.0	92.0	76.0	60.0	47.0	36.8	28.6	
90	81.0	105.0	90.0	75.0	59.0	46.0	36.0	27.8	21.0
95		98.0	89.0	74.0	58.0	45.0	35.0	26.8	20.4
100		87.0	88.0	73.0	57.0	44.0	34.2	26.0	20.0
105		75.0	87.0	72.0	55.0	43.2	33.6	25.0	19.4
110		62.0	81.0	71.0	54.0	42.2	32.8	24.4	18.8
115			75.0	70.0	53.0	41.4	32.0	23.8	18.2
120			67.0	69.0	52.0	40.6	31.2	23.2	17.6
125				68.0	51.0	39.8	30.6	22.6	17.2
130				64.0	50.0	39.0	29.8	22.0	16.6
135				59.0	48.0	38.0	29.2	21.4	16.2
140				53.0	47.0	37.4	28.6	21.0	15.8
145					45.0	36.6	27.8	20.4	15.2
150					43.6	35.8	27.2	20.0	14.8
155					42.2	35.2	26.4	19.4	14.4
160					40.6	34.4	25.8	18.8	14.0
165						33.6	25.0	18.4	13.6
170						33.0	24.2	18.0	13.2
175						32.4	23.4	17.6	12.8
180						31.8	22.8	17.0	12.4
185							22.4	16.6	12.0
190							22.0	16.2	11.6
195							21.4	15.8	11.2
200							21.0	15.4	10.8
205								15.0	10.6
210								14.6	10.2
215								14.2	9.8
220								13.8	9.6
225									9.2
230									9.0
235									8.6

THIS CHART IS ONLY A GUIDE AND SHOULD NOT BE USED TO OPERATE THE CRANE. The individual crane's load chart, operating instructions and other instructional plates must be read and understood prior to operating the crane.

81°
115.9 ft.
82-240 ft.
100%
29' 2" Spread
360°
264,500 lbs.

Pounds (thousands)

Feet	82	101.7	121.4	141.1	160.8	180.5	200.1	219.8	239.5
45									
50	116.0								
55	113.0	99.0							
60	107.0	99.0	80.0						
65	102.0	95.0	80.0						
70	97.0	92.0	80.0	65.0					
75	93.0	88.0	79.0	65.0	51.0				
80	89.0	84.0	77.0	64.0	51.0	40.4	32.0		
85	85.0	80.0	75.0	64.0	50.0	39.8	31.6		
90	82.0	77.0	72.0	63.0	49.0	39.2	31.2	23.8	
95	79.0	74.0	70.0	62.0	49.0	38.8	30.6	23.4	18.4
100		72.0	67.0	61.0	48.0	38.2	30.2	23.0	18.0
105		69.0	65.0	60.0	47.0	37.6	29.6	22.6	17.4
110		67.0	62.0	58.0	47.0	37.2	29.2	22.2	17.0
115		64.0	60.0	56.0	46.0	36.6	28.6	21.6	16.6
120			58.0	55.0	45.0	36.0	28.2	21.2	16.2
125			57.0	53.0	45.0	35.6	27.6	20.8	15.8
130			55.0	52.0	44.0	35.0	27.2	20.4	15.4
135				50.0	43.6	34.4	26.6	20.0	15.0
140				49.0	43.0	33.8	26.0	19.4	14.6
145				48.0	42.4	33.4	25.2	19.0	14.2
150				47.0	41.8	32.8	24.6	18.6	14.0
155					41.2	32.4	24.0	18.2	13.6
160					40.6	31.8	23.6	17.8	13.2
165					40.2	31.2	23.0	17.4	12.8
170					39.6	30.8	22.6	17.0	12.4
175						30.2	22.2	16.6	12.2
180						29.8	21.8	16.4	11.8
185						29.2	21.4	16.0	11.4
190						28.8	21.0	15.6	11.2
195							20.6	15.2	10.8
200							20.2	14.8	10.6
205							19.8	14.4	10.2
210								14.2	9.8
215								13.8	9.6
220								13.6	9.2
225								13.2	9.0
230									8.8
235									8.4
240									8.2

81°
147.6 ft.
82-240 ft.
100%
29' 2" Spread
360°
264,500 lbs.

Pounds (thousands)

Feet	82	101.7	121.4	141.1	160.8	180.5	200.1	219.8	239.5
55									
60	86.0								
65	83.0								
70	79.0	70.0							
75	75.0	67.0	57.0	45.0					
80	71.0	65.0	57.0	45.0	37.2				
85	68.0	62.0	57.0	45.0	37.2				
90	65.0	60.0	55.0	45.0	37.2	29.8	23.2		
95	62.0	58.0	54.0	45.0	37.0	29.8	23.2	18.0	
100	59.0	56.0	52.0	45.0	36.8	29.4	23.2	18.0	13.6
105		53.0	50.0	45.0	36.4	29.2	22.8	18.0	13.6
110		52.0	49.0	45.0	36.2	29.0	22.6	17.8	13.6
115		50.0	47.0	44.0	36.0	28.8	22.4	17.6	13.4
120		49.0	46.0	42.6	35.8	28.6	22.2	17.4	13.2
125			44.0	41.2	35.4	28.2	22.0	17.2	13.0
130			43.0	40.0	35.2	28.0	21.6	16.8	12.8
135			41.8	38.8	35.0	27.8	21.4	16.6	12.6
140			40.4	37.6	34.6	27.6	21.2	16.4	12.2
145				36.4	33.8	27.2	20.8	16.2	12.0
150				35.4	33.2	27.0	20.6	15.8	11.8
155				34.4	32.4	26.8	20.4	15.6	11.6
160					31.8	26.4	20.0	15.4	11.4
165					31.0	26.0	19.8	15.0	11.0
170					30.2	25.6	19.6	14.8	10.8
175					29.2	25.4	19.2	14.6	10.6
180						25.0	19.0	14.4	10.4
185						24.6	18.8	14.0	10.0
190						24.4	18.4	13.8	9.8
195						24.0	18.2	13.6	9.6
200							18.0	13.2	9.4
205							17.6	13.0	9.2
210							17.4	12.8	9.0
215							17.2	12.6	8.6
220								12.2	8.4
225								12.0	8.2
230								11.8	8.0
235								11.6	7.8
240									7.6
245									7.4

THIS CHART IS ONLY A GUIDE AND SHOULD NOT BE USED TO OPERATE THE CRANE. The individual crane's load chart, operating instructions and other instructional plates must be read and understood prior to operating the crane.

load charts

81°
163.4 ft.
82-240 ft.
100%
29' 2" Spread
360°
264,500 lbs.

Pounds (thousands)

Feet	82	101.7	121.4	141.1	160.8	180.5	200.1	219.8	239.5
65									
70	67.0								
75	64.0	57.0							
80	62.0	57.0	45.0	37.0					
85	59.0	55.0	45.0	37.0					
90	57.0	53.0	45.0	37.0	29.2				
95	55.0	51.0	45.0	37.0	29.2	23.8	19.2		
100	53.0	50.0	45.0	37.0	29.2	23.8	19.2	14.6	
105		48.0	44.0	37.0	29.2	23.6	19.0	14.6	10.8
110		46.0	43.2	37.0	29.2	23.6	19.0	14.6	10.8
115		45.0	41.8	37.0	29.2	23.4	18.8	14.4	10.8
120		43.4	40.6	36.6	29.2	23.2	18.6	14.4	10.8
125			39.2	35.8	29.2	23.2	18.6	14.2	10.6
130			38.0	34.8	29.2	23.0	18.4	14.0	10.4
135			36.8	34.0	29.2	22.8	18.2	13.8	10.2
140			35.8	33.0	28.8	22.6	18.0	13.6	10.2
145				32.0	28.6	22.6	17.8	13.6	10.0
150				31.0	28.2	22.4	17.6	13.4	9.8
155				30.0	27.8	22.2	17.6	13.2	9.6
160				29.2	27.4	22.0	17.4	13.0	9.4
165					27.0	21.8	17.2	12.8	9.4
170					26.2	21.8	17.0	12.6	9.2
175					25.4	21.6	16.8	12.6	9.0
180					24.8	21.4	16.6	12.4	8.8
185						21.2	16.4	12.2	8.6
190						21.0	16.2	12.0	8.4
195						20.6	16.0	11.8	8.4
200						20.4	16.0	11.6	8.2
205							15.8	11.4	8.0
210							15.6	11.4	7.8
215							15.4	11.2	7.6
220							15.2	11.0	7.4
225								10.8	7.2
230								10.6	7.0
235								10.4	7.0
240								10.2	6.8
245									6.6
250									6.4
255									6.2

81°
179.2 ft.
82-240 ft.
100%
29' 2" Spread
360°
264,500 lbs.

Pounds (thousands)

Feet	82	101.7	121.4	141.1	160.8	180.5	200.1	219.8	239.5
70									
75	55.0								
80	55.0	45.0							
85	55.0	45.0							
90	53.0	45.0	36.6	29.8					
95	51.0	45.0	36.6	29.8	23.8				
100	49.0	45.0	36.6	29.8	23.8	19.6	15.2		
105	47.0	43.2	36.6	29.8	23.8	19.6	15.2	11.6	
110	45.0	41.8	36.6	29.8	23.8	19.4	15.2	11.6	
115		40.4	36.6	29.8	23.8	19.4	15.2	11.6	8.4
120		39.0	36.2	29.8	23.8	19.4	15.0	11.6	8.4
125		37.8	35.2	29.8	23.8	19.2	15.0	11.6	8.4
130		36.4	34.0	29.8	23.8	19.2	15.0	11.4	8.2
135			33.0	29.8	23.8	19.0	14.8	11.4	8.2
140			32.0	29.2	23.8	19.0	14.8	11.2	8.0
145			31.0	28.4	23.8	18.8	14.6	11.2	8.0
150			30.0	27.4	23.8	18.8	14.6	11.0	7.8
155				26.6	23.6	18.6	14.4	11.0	7.8
160				25.8	23.4	18.6	14.4	10.8	7.6
165				25.2	23.2	18.4	14.2	10.8	7.6
170				24.4	23.0	18.4	14.2	10.6	7.4
175					22.4	18.2	14.0	10.4	7.4
180					21.8	18.2	13.8	10.4	7.2
185					21.2	18.0	13.8	10.2	7.2
190					20.4	18.0	13.6	10.2	7.0
195						17.6	13.6	10.0	6.8
200						17.2	13.4	10.0	6.8
205						16.8	13.4	9.8	6.6
210							13.2	9.6	6.6
215							13.0	9.6	6.4
220							13.0	9.4	6.2
225								9.2	6.2
230								9.2	6.0
235								9.0	5.8
240								8.8	5.8
245									5.6
250									5.6
255									5.4
260									5.2

THIS CHART IS ONLY A GUIDE AND SHOULD NOT BE USED TO OPERATE THE CRANE. The individual crane's load chart, operating instructions and other instructional plates must be read and understood prior to operating the crane.

Length and Type of Boom

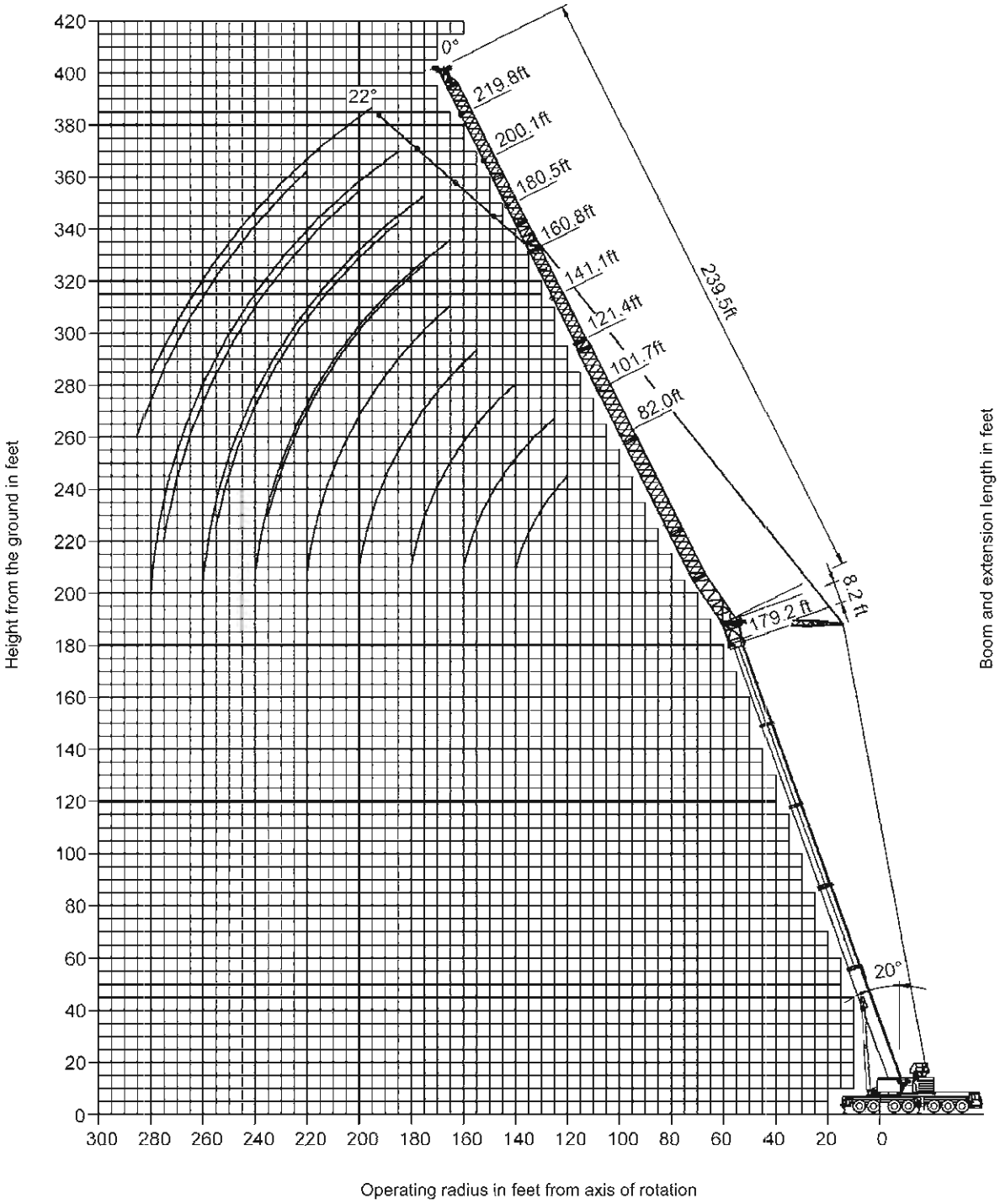

THIS CHART IS ONLY A GUIDE AND SHOULD NOT BE USED TO OPERATE THE CRANE. The individual crane's load chart, operating instructions and other instructional plates must be read and understood prior to operating the crane.

load charts

70° | 82-240 ft. | 100% | 360° | 264,500 lbs.
52.6 ft. | 29' 2" Spread

Pounds (thousands)

Feet	82	101.7	121.4	141.1	160.8	180.5	200.1	219.8	239.5
60	152.0								
65	142.0								
70	134.0								
75	128.0	125.0							
80	120.0	119.0							
85	112.0	112.0							
90	104.0	105.0	100.0						
95		98.0	97.0	81.0					
100		92.0	91.0	80.0	64.0				
105		86.0	85.0	79.0	62.0				
110		78.0	80.0	77.0	61.0				
115			76.0	75.0	59.0	46.0			
120			72.0	71.0	58.0	45.0	34.4		
125			68.0	67.0	57.0	43.6	33.4	25.4	
130			61.0	64.0	56.0	42.6	32.6	24.4	
135				61.0	54.0	41.6	31.8	23.4	17.6
140				58.0	53.0	40.6	31.0	22.6	17.2
145				55.0	51.0	39.6	30.2	22.0	16.6
150				49.0	50.0	38.8	29.4	21.4	16.0
155					48.0	38.0	28.8	20.8	15.6
160					45.0	37.0	28.0	20.2	15.0
165					43.2	36.2	27.2	19.8	14.6
170					40.0	35.4	26.4	19.2	14.2
175						34.6	25.6	18.8	13.6
180						34.0	24.8	18.2	13.2
185						33.0	24.0	17.8	12.8
190						31.4	23.2	17.2	12.4
195							22.6	16.8	12.0
200							22.2	16.4	11.6
205							21.6	16.0	11.2
210								15.6	10.8
215								15.0	10.6
220								14.6	10.2
225								14.4	9.8
230									9.6
235									9.2
240									9.0
245									8.6

70° | 82-240 ft. | 100% | 360° | 264,500 lbs.
84.3 ft. | 29' 2" Spread

Pounds (thousands)

Feet	82	101.7	121.4	141.1	160.8	180.5	200.1	219.8	239.5
70									
75	116.0								
80	110.0								
85	104.0								
90	97.0	96.0							
95	90.0	89.0	89.0						
100	85.0	84.0	83.0						
105		78.0	78.0	75.0					
110		74.0	73.0	72.0					
115		70.0	69.0	68.0	57.0				
120		66.0	65.0	64.0	56.0				
125			62.0	61.0	55.0	42.4			
130			59.0	58.0	54.0	41.6			
135			56.0	55.0	53.0	40.8	31.4		
140			53.0	52.0	52.0	39.8	30.8	22.8	
145				50.0	49.0	39.0	30.0	22.2	16.8
150				48.0	47.0	38.2	29.4	21.6	16.2
155				46.0	45.0	37.6	28.6	21.0	15.8
160				43.6	43.2	36.8	28.0	20.4	15.4
165					41.4	36.0	27.2	20.0	14.8
170					39.6	35.2	26.4	19.4	14.4
175					38.0	34.6	25.6	19.0	14.0
180					36.4	33.8	24.8	18.6	13.6
185						33.2	24.0	18.0	13.2
190						32.6	23.6	17.6	12.8
195						31.8	23.0	17.2	12.4
200						30.4	22.4	16.8	12.0
205							22.0	16.2	11.6
210							21.6	15.8	11.2
215							21.0	15.4	11.0
220							20.6	15.0	10.6
225								14.6	10.2
230								14.4	10.0
235								14.0	9.6
240									9.4
245									9.0
250									8.8
255									8.4

THIS CHART IS ONLY A GUIDE AND SHOULD NOT BE USED TO OPERATE THE CRANE. The individual crane's load chart, operating instructions and other instructional plates must be read and understood prior to operating the crane.

70°
115.9 ft.
82-240 ft.
100%
29' 2" Spread
360°
264,500 lbs.

Pounds (thousands)

Feet	82	101.7	121.4	141.1	160.8	180.5	200.1	219.8	239.5
85									
90	72.0								
95	69.0								
100	66.0	63.0							
105	64.0	61.0	58.0						
110	61.0	58.0	55.0						
115	59.0	56.0	53.0						
120		54.0	52.0	49.0					
125		52.0	50.0	48.0					
130		51.0	48.0	46.0					
135		50.0	47.0	44.0	43.0				
140			46.0	43.0	41.6	36.8			
145			44.0	41.6	40.4	36.8	27.8		
150			42.8	40.4	39.0	35.8	27.4		
155			41.6	39.2	37.8	34.8	26.8	20.2	
160				38.0	36.8	34.0	26.2	19.6	14.8
165				37.0	35.6	33.0	25.6	19.2	14.4
170				36.0	34.6	32.0	25.0	18.8	14.0
175				35.0	33.6	31.2	24.2	18.4	13.8
180					32.8	30.2	23.6	18.0	13.4
185					31.6	29.4	23.2	17.6	13.0
190					30.4	28.6	22.6	17.2	12.6
195					29.2	27.8	22.4	16.8	12.2
200						27.0	22.0	16.4	12.0
205						26.0	21.6	16.0	11.6
210						25.0	21.0	15.8	11.2
215						24.0	20.6	15.4	11.0
220							20.2	15.0	10.6
225							19.8	14.6	10.4
230							19.6	14.2	10.0
235							19.2	14.0	9.8
240								13.6	9.4
245								13.4	9.2
250									8.8
255									8.6
260									8.4
265									8.0

70°
147.6 ft.
82-240 ft.
100%
29' 2" Spread
360°
264,500 lbs.

Pounds (thousands)

Feet	82	101.7	121.4	141.1	160.8	180.5	200.1	219.8	239.5
95									
100	51.0								
105	51.0								
110	49.0								
115	46.0	42.0							
120	44.0	40.4							
125	42.0	39.0	36.8						
130	40.2	37.6	35.6						
135		36.4	34.4	32.0					
140		35.2	33.2	30.8					
145		34.0	32.0	29.8	28.8				
150		33.0	31.0	28.8	27.8				
155			30.0	27.8	26.8	24.6			
160			29.0	27.0	25.8	24.2	21.4		
165			28.2	26.0	25.0	23.4	21.2	16.4	
170			27.4	25.4	24.4	22.6	20.8	16.2	
175				24.8	23.8	21.8	20.2	16.0	11.8
180				24.0	23.0	21.0	19.6	15.8	11.8
185				23.4	22.4	20.4	19.0	15.6	11.4
190				22.8	21.6	19.6	18.4	15.2	11.2
195					21.0	19.0	17.8	15.0	11.0
200					20.4	18.4	17.2	14.8	10.8
205					19.8	17.8	16.6	14.6	10.6
210						17.2	16.0	14.2	10.2
215						16.8	15.6	14.0	10.0
220						16.2	15.0	13.6	9.8
225						15.8	14.6	13.4	9.6
230							14.0	13.0	9.4
235							13.6	12.6	9.0
240							13.2	12.2	8.8
245							12.8	11.8	8.6
250								11.4	8.4
255								11.2	8.2
260								10.8	8.0
265									7.8
270									7.6
275									7.2
280									7.0

THIS CHART IS ONLY A GUIDE AND SHOULD NOT BE USED TO OPERATE THE CRANE. The individual crane's load chart, operating instructions and other instructional plates must be read and understood prior to operating the crane.

load charts

70° | 82-240 ft. | 100% | 360° | 264,500 lbs.
163.4 ft. | 29' 2" Spread

Pounds (thousands)

Feet	82	101.7	121.4	141.1	160.8	180.5	200.1	219.8	239.5
110									
115	39.0								
120	37.6	35.2							
125	36.2	33.8							
130	35.0	32.6							
135	33.8	31.6	29.6						
140		30.4	28.6						
145		29.4	27.6	25.4					
150		28.4	26.6	24.6					
155		27.6	25.8	24.0	23.0				
160			25.0	23.2	22.2	19.4			
165			24.4	22.4	21.4	19.4	17.2		
170			23.6	21.6	20.6	18.6	17.2		
175			23.0	21.0	20.0	18.0	16.8	13.6	
180				20.2	19.2	17.4	16.2	13.4	
185				19.6	18.6	16.6	15.6	13.2	9.8
190				19.0	18.0	16.0	15.0	13.2	9.6
195				18.4	17.4	15.8	14.6	12.8	9.4
200					16.8	15.0	14.0	12.4	9.2
205					16.2	14.4	13.4	12.0	9.0
210					15.6	14.0	13.0	11.6	9.0
215					15.2	13.4	12.6	11.2	8.8
220						13.0	12.2	10.8	8.6
225						12.6	11.6	10.4	8.4
230						12.0	11.2	10.0	8.2
235						11.6	10.8	9.6	8.0
240							10.4	9.4	7.8
245							10.0	9.0	7.6
250							9.8	8.6	7.2
255							9.4	8.2	7.0
260								8.0	6.8
265								7.6	6.6
270								7.4	6.2
275								7.0	6.0
280									5.8
285									5.4

70° | 82-240 ft. | 100% | 360° | 264,500 lbs.
179.2 ft. | 29' 2" Spread

Pounds (thousands)

Feet	82	101.7	121.4	141.1	160.8	180.5	200.1	219.8	239.5
115									
120	35.0								
125	33.6	29.8							
130	32.4	28.8							
135	31.2	27.6							
140	30.2	26.8	25.0						
145		25.8	24.4						
150		25.2	23.4						
155		24.4	22.6	20.6					
160		23.6	21.8	19.8					
165			21.2	19.2	18.2	15.4			
170			20.4	18.4	17.4	15.4			
175			19.8	17.8	16.8	14.8	12.8		
180			19.2	17.2	16.2	14.2	12.8		
185				16.6	15.6	13.8	12.4	10.6	
190				16.0	15.0	13.2	12.0	10.6	
195				15.6	14.6	12.6	11.4	10.2	7.6
200				15.0	14.0	12.2	11.0	9.8	7.6
205					13.6	11.6	10.6	9.4	7.4
210					13.0	11.2	10.0	9.0	7.4
215					12.6	10.8	9.6	8.6	7.2
220					12.2	10.4	9.2	8.4	7.0
225						10.0	9.0	8.0	6.6
230						9.6	8.6	7.6	6.4
235						9.2	8.2	7.2	6.0
240						8.8	7.8	7.0	5.8
245							7.4	6.6	5.4
250							7.2	6.2	5.2
255							6.8	6.0	4.8
260							6.6	5.6	4.6
265								5.4	4.4
270								5.2	4.0
275								4.8	3.8
280								4.6	3.6

THIS CHART IS ONLY A GUIDE AND SHOULD NOT BE USED TO OPERATE THE CRANE. The individual crane's load chart, operating instructions and other instructional plates must be read and understood prior to operating the crane.

Length and Type of Boom

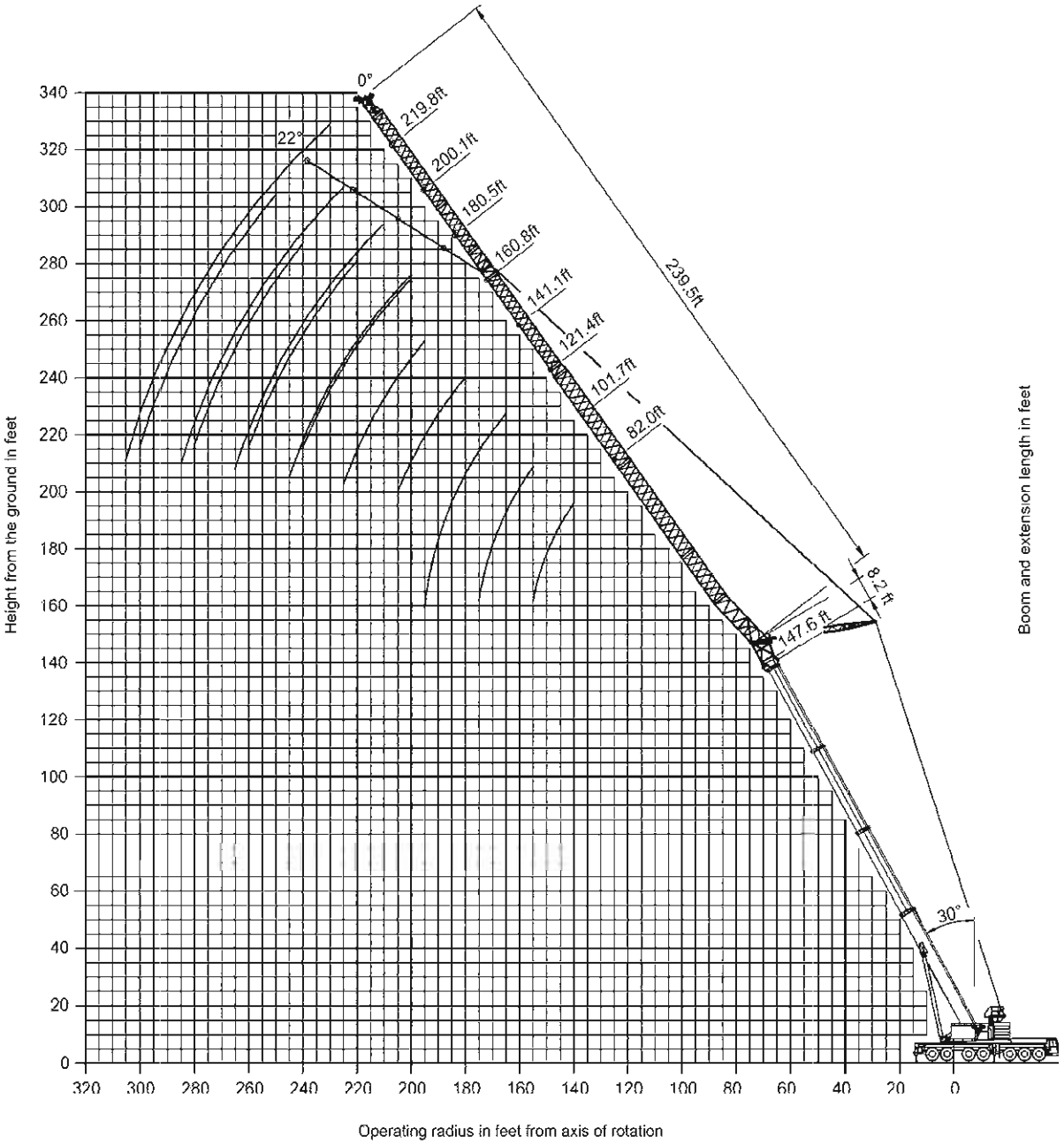

THIS CHART IS ONLY A GUIDE AND SHOULD NOT BE USED TO OPERATE THE CRANE. The individual crane's load chart, operating instructions and other instructional plates must be read and understood prior to operating the crane.

load charts

60°
52.6 ft.

82-240 ft.

100%
29' 2" Spread

360°

264,500 lbs.

Pounds (thousands)

Feet	82	101.7	121.4	141.1	160.8	180.5	200.1	219.8	239.5
90	100.0								
95	94.0	93.0							
100	88.0	87.0							
105		82.0	81.0						
110		77.0	76.0						
115		73.0	72.0						
120		69.0	68.0	67.0					
125			64.0	63.0					
130			61.0	60.0					
135			58.0	57.0	57.0				
140			56.0	55.0	54.0				
145				52.0	52.0	41.6			
150				50.0	49.0	40.6			
155				48.0	47.0	39.6	30.2		
160				46.0	45.0	38.8	29.4		
165					43.2	37.8	28.6	20.8	
170					41.4	37.0	28.0	20.2	
175					39.8	36.2	27.2	19.6	
180						35.4	26.4	19.2	14.0
185						34.6	25.4	18.6	13.6
190						33.8	24.4	18.2	13.2
195						33.2	23.8	17.6	12.8
200							23.2	17.2	12.4
205							22.6	16.8	12.0
210							22.0	16.4	11.6
215							21.6	15.8	11.2
220								15.4	10.8
225								15.0	10.6
230								14.8	10.2
235								14.4	9.8
240									9.6
245									9.2
250									9.0
255									8.6

THIS CHART IS ONLY A GUIDE AND SHOULD NOT BE USED TO OPERATE THE CRANE. The individual crane's load chart, operating instructions and other instructional plates must be read and understood prior to operating the crane.

60° | 82-240 ft. | 100% | 360° | 264,500 lbs.
84.3 ft. | 29' 2" Spread

Pounds (thousands)

Feet	82	101.7	121.4	141.1	160.8	180.5	200.1	219.8	239.5
95									
100	77.0								
105	72.0								
110	68.0								
115	64.0	63.0							
120		60.0							
125		57.0	56.0						
130		54.0	53.0						
135		51.0	50.0						
140			48.0	47.0					
145			46.0	44.0					
150			43.4	42.4					
155			41.6	40.4	39.6				
160				38.6	37.8	37.0			
165				37.0	36.2	35.4			
170				35.4	34.6	33.8			
175				34.0	33.2	32.4	28.0		
180					31.8	31.0	27.4		
185					30.6	29.8	26.8	19.4	
190					29.4	28.6	26.0	19.0	
195					28.2	27.4	25.4	18.4	
200						26.2	24.8	18.0	13.2
205						25.2	23.8	17.6	12.8
210						24.2	23.0	17.2	12.4
215						23.4	22.4	16.6	12.0
220							21.8	16.2	11.6
225							21.0	15.8	11.2
230							20.2	15.4	11.0
235							19.4	15.0	10.6
240								14.6	10.2
245								14.4	10.0
250								14.0	9.6
255								13.6	9.2
260									9.0
265									8.8
270									8.4
275									8.2

60° | 82-240 ft. | 100% | 360° | 264,500 lbs.
115.9 ft. | 29' 2" Spread

Pounds (thousands)

Feet	82	101.7	121.4	141.1	160.8	180.5	200.1	219.8	239.5
115									
120	51.0								
125	49.0								
130	47.0								
135	46.0	43.6							
140		42.2							
145		40.6	39.6						
150		39.8	37.4						
155		36.8	36.2						
160			34.4	33.2					
165			33.0	31.8					
170			31.6	30.4					
175			30.2	29.0	28.2				
180				27.8	27.0				
185				26.6	25.8	25.0			
190				25.6	24.8	23.8			
195				24.4	23.8	22.8	22.0		
200					22.8	21.8	21.2		
205					21.8	21.0	20.2	17.6	
210					21.0	20.2	19.4	17.2	12.6
215					20.0	19.2	18.6	16.8	12.2
220						18.4	17.8	16.4	12.0
225						17.8	17.0	16.0	11.6
230						17.0	16.4	15.8	11.2
235						16.2	15.6	15.2	11.0
240							15.0	14.8	10.6
245							14.4	13.8	10.4
250								13.2	10.0
255								12.8	9.8
260								12.2	9.4
265								11.6	9.2
270									8.8
275									8.6
280									8.4
285									8.0

THIS CHART IS ONLY A GUIDE AND SHOULD NOT BE USED TO OPERATE THE CRANE. The individual crane's load chart, operating instructions and other instructional plates must be read and understood prior to operating the crane.

load charts

60° | 82-240 ft. | 100% | 360° | 264,500 lbs.
147.6 ft. | 29' 2" Spread

Pounds (thousands)

Feet	82	101.7	121.4	141.1	160.8	180.5	200.1	219.8	239.5
135									
140	33.4								
145	31.6								
150	30.0								
155	28.6	26.0							
160		25.2							
165		24.6	23.0						
170		23.8	22.2						
175		23.0	21.4						
180			20.8	18.8					
185			20.2	18.2					
190			19.6	17.6					
195			18.8	17.0	16.0				
200				16.4	15.4	13.6			
205				16.0	15.0	13.2			
210					14.4	12.6	15.2		
215					14.0	12.2	12.6		
220					13.4	11.8	10.8		
225					13.0	11.2	10.2	9.2	
230						10.8	9.8	8.8	8.4
235						10.4	9.4	8.4	8.4
240						10.0	9.0	8.2	8.2
245						9.6	8.6	7.8	7.8
250							8.2	7.4	7.6
255							7.8	7.0	7.2
260							7.6	6.8	7.0
265							7.2	6.4	6.6
270								6.2	6.4
275								5.8	6.0
280								5.6	5.6
285								5.4	5.2
290									4.8
295									4.4
300									4.0
305									3.6

60° | 82-200 ft. | 100% | 360° | 264,500 lbs.
163.4 ft. | 29' 2" Spread

Pounds (thousands)

Feet	82	101.7	121.4	141.1	160.8	180.5	200.1
140							
145	25.4						
150	24.8						
155	24.0						
160	23.2	21.2					
165		20.6					
170		19.8					
175		19.2	17.6				
180		18.6	17.0				
185			16.4	14.4			
190			15.8	14.0			
195			15.4	13.4			
200			14.8	13.0			
205				12.4	11.4		
210				12.0	11.0	9.2	
215				11.6	10.6	8.8	
220				11.2	10.2	8.4	7.6
225					9.8	8.0	7.2
230					9.4	7.6	6.8
235					9.0	7.2	6.4
240					8.6	6.8	6.0
245						6.6	5.8
250						6.2	5.4
255						6.0	5.2
260						5.6	4.8
265							4.6
270							4.2
275							4.0
280							3.8

THIS CHART IS ONLY A GUIDE AND SHOULD NOT BE USED TO OPERATE THE CRANE. The individual crane's load chart, operating instructions and other instructional plates must be read and understood prior to operating the crane.

60°
179.2 ft.

102-161 ft.

100%
29' 2" Spread

360°

264,500 lbs.

Pounds (thousands)

Feet	101.7	121.4	141.1	160.8
170				
175	16.0			
180	15.4			
185	14.8	13.2		
190	14.4	12.8		
195	13.8	12.4		
200		11.8	10.0	
205		11.4	9.6	
210			9.2	
215			8.8	
220			8.4	7.4
225			8.0	7.0
230				6.6
235				6.4
240				6.0
245				5.8

THIS CHART IS ONLY A GUIDE AND SHOULD NOT BE USED TO OPERATE THE CRANE. The individual crane's load chart, operating instructions and other instructional plates must be read and understood prior to operating the crane.

Working Range
w/MegaWingLift

240 ft. Luffing Jib

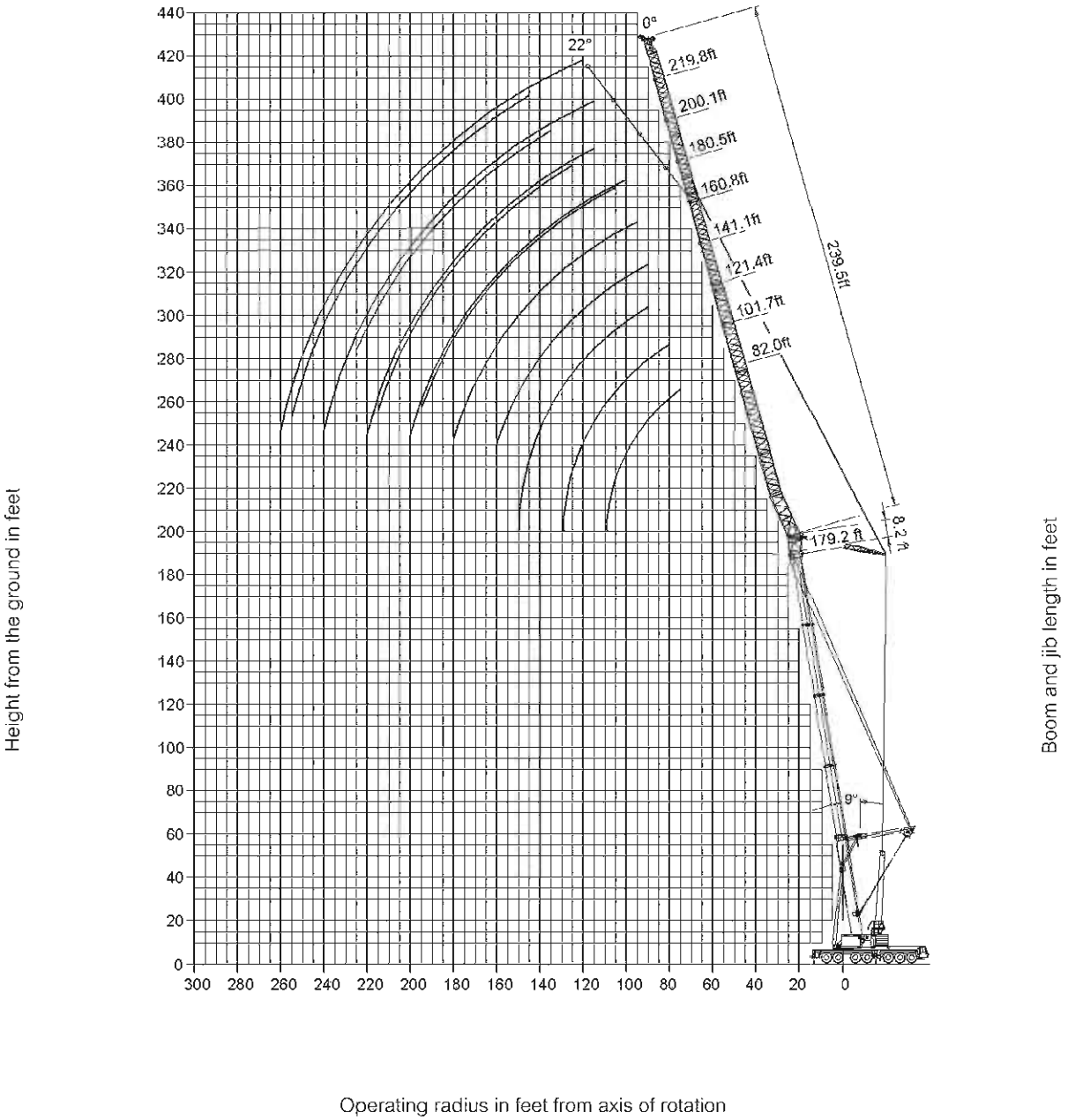

THIS CHART IS ONLY A GUIDE AND SHOULD NOT BE USED TO OPERATE THE CRANE. The individual crane's load chart, operating instructions and other instructional plates must be read and understood prior to operating the crane.

81°
116 ft.

82-240 ft.

100%
29'-2" spread

360°

352,700 lbs.

Pounds (thousands)

Feet	82'	101.7	121.4'	141.1'	160.8'	180.5'	200.1'	219.8'	239.5'
50	141.0								
55	136.0	107.0							
60	129.0	107.0	85.0						
65	122.0	107.0	85.0						
70	115.0	107.0	85.0	69.0					
75	109.0	107.0	85.0	69.0	58.0				
80	105.0	107.0	85.0	69.0	58.0	48.0			
85	100.0	107.0	85.0	69.0	58.0	48.0			
90	97.0	105.0	85.0	69.0	58.0	48.0	39.6		
95		102.0	85.0	69.0	58.0	48.0	39.6	33.0	
100		98.0	85.0	69.0	58.0	48.0	39.6	33.0	26.2
105		93.0	85.0	69.0	58.0	48.0	39.6	33.0	26.2
110		81.0	85.0	69.0	58.0	48.0	39.6	33.0	26.2
115			84.0	69.0	58.0	48.0	39.6	33.0	26.2
120			80.0	69.0	58.0	48.0	39.6	33.0	26.2
125			72.0	69.0	58.0	48.0	39.6	33.0	26.2
130			63.0	69.0	58.0	48.0	39.6	33.0	26.2
135				68.0	58.0	48.0	39.6	33.0	26.2
140				63.0	58.0	47.0	39.6	33.0	25.8
145				57.0	58.0	47.0	39.6	33.0	25.4
150				50.0	57.0	46.0	39.6	33.0	24.8
155					55.0	46.0	39.6	32.8	24.4
160					51.0	46.0	39.6	32.2	23.8
165					46.0	45.0	39.6	31.6	23.2
170					40.8	45.0	39.6	30.6	22.8
175						44.0	39.6	29.8	22.2
180						41.4	39.6	29.0	21.8
185						37.6	39.6	28.0	21.4
190						33.2	39.6	27.2	20.8
195							37.0	26.6	20.4
200							34.0	26.2	19.8
205							30.8	25.8	19.4
210								25.4	19.0
215								24.8	18.6
220								24.6	18.4
225									18.0
230									17.6
235									17.2
240									17.0

81°
148 ft.

82-240 ft.

100%
29'-2" spread

360°

352,700 lbs.

Pounds (thousands)

Feet	82'	101.7'	121.4'	141.1'	160.8'	180.5'	200.1'	219.8'	239.5'
60	119.0								
65	113.0								
70	109.0	101.0							
75	106.0	98.0	81.0						
80	103.0	94.0	81.0	63.0					
85	102.0	91.0	81.0	63.0					
90	100.0	89.0	81.0	63.0	54.0				
95	98.0	87.0	79.0	63.0	54.0	44.0			
100	93.0	85.0	78.0	63.0	54.0	44.0	36.6	30.6	
105		84.0	76.0	63.0	54.0	44.0	36.6	30.6	24.4
110		82.0	74.0	63.0	54.0	44.0	36.6	30.6	24.4
115		78.0	72.0	63.0	54.0	44.0	36.6	30.6	24.4
120			71.0	63.0	54.0	44.0	36.6	30.6	24.4
125			70.0	63.0	54.0	44.0	36.6	30.6	24.4
130			68.0	62.0	54.0	44.0	36.6	30.6	24.4
135			64.0	61.0	54.0	44.0	36.6	30.6	24.4
140				60.0	54.0	44.0	36.6	30.6	24.4
145				58.0	54.0	44.0	36.6	30.6	24.4
150				55.0	54.0	44.0	36.6	30.6	24.4
155				52.0	54.0	44.0	36.6	30.6	24.2
160					52.0	43.8	36.6	30.6	23.8
165					50.0	43.6	36.6	30.6	23.4
170					48.0	43.2	36.6	30.6	23.0
175					45.0	42.6	36.6	30.4	22.6
180						42.2	36.6	29.6	22.0
185						41.6	36.6	28.8	21.6
190						41.0	36.6	28.0	21.2
195						37.0	36.6	27.4	20.8
200							36.6	26.6	20.4
205							36.4	26.2	19.8
210							33.6	25.8	19.4
215							30.2	25.4	19.0
220								25.0	18.6
225								24.6	18.4
230									18.0
235									17.8
240									17.4
245									17.2

THIS CHART IS ONLY A GUIDE AND SHOULD NOT BE USED TO OPERATE THE CRANE. The individual crane's load chart, operating instructions and other instructional plates must be read and understood prior to operating the crane.

load charts
w/MegaWingLift

81° 163 ft. | 82-240 ft. | 100% 29'-2" spread | 360° | 352,700 lbs.

Pounds (thousands)

Feet	82'	101.7'	121.4'	141.1'	160.8'	180.5'	200.1'	219.8'	239.5'
70	98.0								
75	95.0	85.0							
80	93.0	83.0	74.0						
85	91.0	81.0	73.0						
90	89.0	79.0	72.0	60.0					
95	86.0	78.0	70.0	60.0	50.0	41.2			
100	81.0	76.0	68.0	60.0	50.0	41.2			
105		74.0	67.0	60.0	50.0	41.2	34.2	28.6	
110		71.0	66.0	59.0	50.0	41.2	34.2	28.6	
115		68.0	64.0	58.0	50.0	41.2	34.2	28.6	22.6
120		65.0	63.0	57.0	50.0	41.2	34.2	28.6	22.6
125			60.0	55.0	50.0	41.2	34.2	28.6	22.6
130			58.0	54.0	50.0	41.2	34.2	28.6	22.6
135			55.0	52.0	50.0	41.2	34.2	28.6	22.6
140			53.0	50.0	50.0	41.2	34.2	28.6	22.6
145				48.0	48.0	41.2	34.2	28.6	22.6
150				47.0	47.0	41.2	34.2	28.6	22.6
155				45.0	46.0	41.2	34.2	28.6	22.6
160				43.0	44.0	40.6	34.2	28.6	22.6
165					43.0	39.8	34.2	28.6	22.6
170					41.6	39.2	34.2	28.6	22.6
175					40.2	38.4	34.2	28.6	22.4
180					38.8	37.2	34.2	28.6	22.0
185						36.2	34.2	28.4	21.6
190						35.0	33.8	28.0	21.2
195						34.0	32.8	27.4	20.8
200							32.0	26.8	20.4
205							31.0	26.2	20.0
210							29.8	25.8	19.6
215							28.4	25.4	19.2
220							27.0	25.0	18.8
225								24.6	18.4
230								24.2	18.2
235								23.6	17.8
240									17.6
245									17.2
250									17.0
255									16.8

81° 179 ft. | 82-240 ft. | 100% 29'-2" spread | 360° | 352,700 lbs.

Pounds (thousands)

Feet	82'	101.7'	121.4'	141.1'	160.8'	180.5'	200.1'	219.8'	239.5'
75	85.0								
80	80.0	75.0							
85	76.0	71.0							
90	73.0	68.0	64.0	55.0					
95	69.0	65.0	61.0	54.0	47.0				
100	66.0	62.0	59.0	53.0	47.0	38.0			
105	63.0	60.0	56.0	51.0	47.0	38.0			
110	60.0	57.0	53.0	50.0	47.0	38.0			
115		54.0	51.0	48.0	46.0	38.0	31.6	25.2	
120		51.0	49.0	47.0	45.0	38.0	31.6	25.2	20.8
125		49.0	47.0	45.0	45.0	38.0	31.6	25.2	20.8
130		46.0	45.0	43.0	43.4	38.0	31.6	25.2	20.8
135			43.2	41.4	42.0	38.0	31.6	25.2	20.8
140			41.4	39.8	40.6	37.4	31.6	25.2	20.8
145			39.6	38.2	39.2	36.4	31.6	25.2	20.8
150			37.8	36.6	38.0	35.4	31.6	25.2	20.8
155				35.2	36.8	34.6	31.6	25.2	20.8
160				33.8	35.4	33.4	31.2	25.2	20.8
165					34.2	31.8	30.6	25.2	20.8
170					33.0	30.4	30.0	25.2	20.8
175					31.8	29.0	28.8	25.2	20.8
180					30.6	27.4	27.6	25.0	20.8
185						26.6	26.4	24.4	20.8
190						25.6	25.2	23.8	20.8
195						24.6	24.0	23.0	20.6
200						23.8	23.2	22.4	20.2
205							22.4	21.8	19.8
210							21.6	21.0	19.4
215							20.8	20.4	19.0
220							20.0	19.8	18.6
225								19.0	18.2
230								18.4	17.6
235								17.8	17.0
240								17.0	16.6
245									16.0
250									15.4
255									14.8
260									14.2

THIS CHART IS ONLY A GUIDE AND SHOULD NOT BE USED TO OPERATE THE CRANE. The individual crane's load chart, operating instructions and other instructional plates must be read and understood prior to operating the crane.

Working Range
w/MegaWingLift

240 ft. Luffing Jib

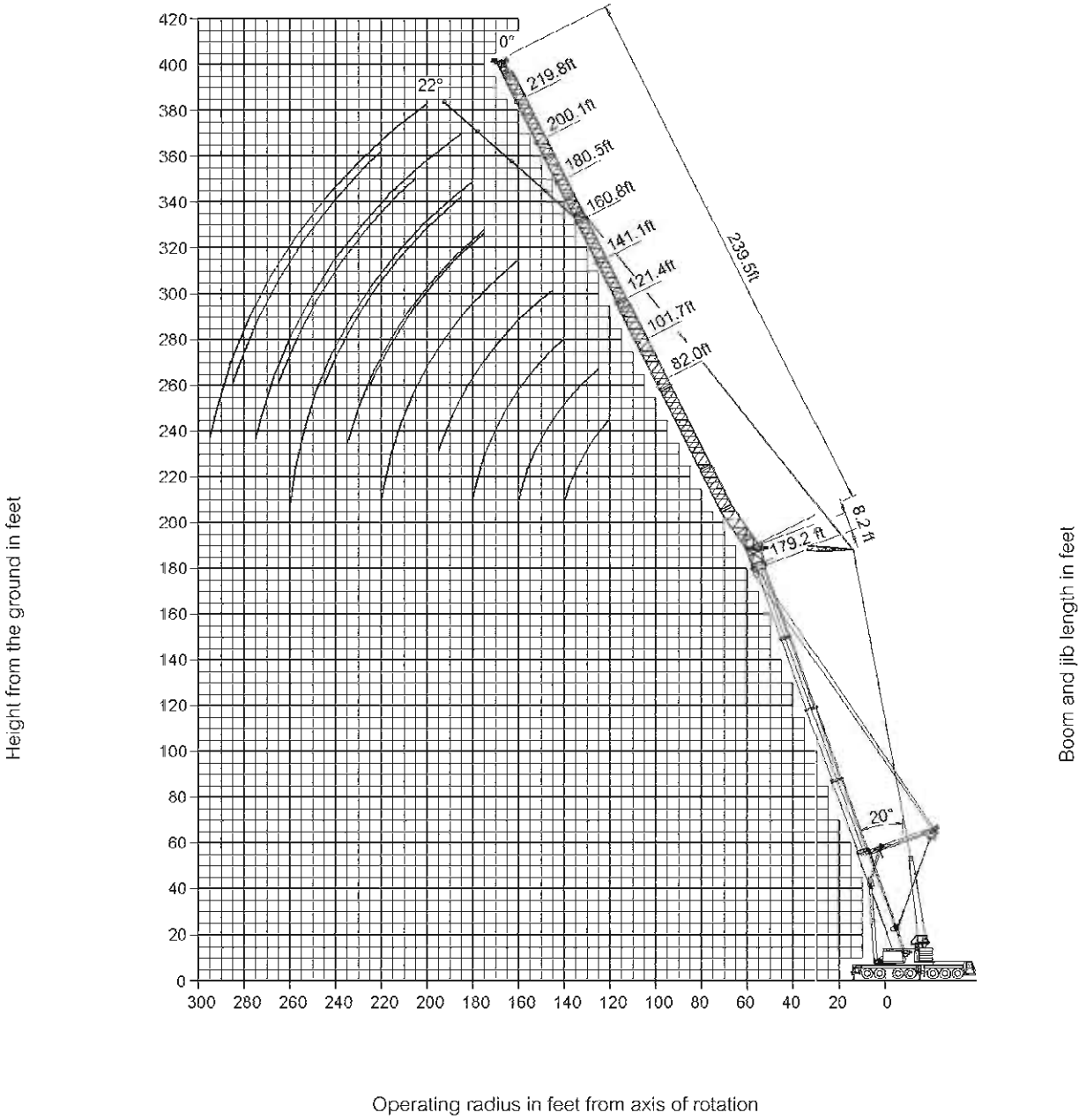

GMK 7550 w/MWL

THIS CHART IS ONLY A GUIDE AND SHOULD NOT BE USED TO OPERATE THE CRANE. The individual crane's load chart, operating instructions and other instructional plates must be read and understood prior to operating the crane.

GROVE

load charts
w/MegaWingLift

70°
116 ft.

82-240 ft.

100%
29'-2" spread

360°

352,700 lbs.

Pounds (thousands)

Feet	82'	101.7'	121.4'	141.1'	160.8'	180.5'	200.1'	219.8'	239.5'
95	98.0								
100	93.0	91.0							
105	88.0	87.0							
110	84.0	83.0							
115	80.0	79.0	78.0						
120		75.0	74.0	71.0					
125		72.0	71.0	70.0	60.0				
130		68.0	68.0	67.0	60.0				
135		66.0	65.0	64.0	59.0				
140			62.0	61.0	59.0	48.0			
145			60.0	59.0	58.0	47.0	40.4		
150			58.0	57.0	56.0	47.0	40.4		
155			55.0	54.0	54.0	47.0	40.4		
160				52.0	52.0	47.0	40.4	33.4	
165				50.0	50.0	46.0	40.4	33.2	25.2
170				49.0	48.0	46.0	40.4	32.8	24.8
175					46.0	45.0	40.4	32.4	24.4
180					45.0	43.6	40.4	32.0	23.8
185					43.2	42.2	40.4	31.6	23.4
190					41.6	40.8	39.8	31.2	23.0
195						39.2	38.4	30.8	22.4
200						37.8	37.0	29.8	22.0
205						36.6	35.8	29.0	21.4
210							34.6	28.0	21.0
215							33.4	27.2	20.6
220							32.2	26.6	20.2
225							31.2	26.0	19.8
230								25.6	19.2
235								25.2	18.8
240								24.8	18.4
245								24.4	18.0
250									17.8
255									17.4
260									17.2
265									16.8

70°
148 ft.

82-240 ft.

100%
29'-2" spread

360°

352,700 lbs.

Pounds (thousands)

Feet	82'	101.7'	121.4'	141.7'	160.8'	180.5'	200.1'	219.8'	239.5'
105	83.0								
110	79.0								
115	75.0	71.0							
120	72.0	69.0							
125	68.0	68.0	62.0						
130	65.0	65.0	61.0						
135		62.0	59.0	54.0					
140		59.0	58.0	53.0	51.0				
145		57.0	56.0	53.0	50.0				
150		55.0	54.0	53.0	49.0				
155			52.0	51.0	48.0	39.6			
160			50.0	49.0	47.0	39.6	37.0		
165			48.0	47.0	46.0	39.6	37.0		
170			46.0	45.0	44.0	39.6	37.0		
175				43.8	42.8	39.6	37.0	31.2	
180				42.2	41.2	39.6	36.6	31.2	24.0
185					39.8	38.4	36.2	31.0	23.6
190					38.4	37.0	35.6	30.8	23.4
195					37.0	35.6	34.8	30.6	23.0
200					35.6	34.4	33.4	30.4	22.6
205					34.4	33.0	32.2	30.0	22.2
210						32.0	31.2	29.8	21.8
215						30.8	30.0	29.0	21.4
220						29.8	29.0	28.2	21.0
225							28.0	27.4	20.6
230							27.0	26.4	20.2
235							26.0	25.4	19.8
240							25.2	24.6	19.4
245							24.2	23.8	19.0
250								23.0	18.6
255								22.2	18.2
260								21.4	18.0
265									17.6
270									17.4
275									17.0
280									16.8

THIS CHART IS ONLY A GUIDE AND SHOULD NOT BE USED TO OPERATE THE CRANE. The individual crane's load chart, operating instructions and other instructional plates must be read and understood prior to operating the crane.

70°
163 ft.

82-240 ft.

100%
29'-2" spread

360°

352,700 lbs.

Pounds (thousands)

Feet	82'	101.7'	121.4'	141.1'	160.8'	180.5'	200.1'	219.8'	239.5'
115	72.0								
120	70.0	62.0							
125	67.0	60.0							
130	64.0	59.0							
135	61.0	58.0	52.0						
140		56.0	51.0	46.0					
145		55.0	50.0	46.0					
150		52.0	49.0	45.0					
155		50.0	48.0	44.0	42.2				
160			47.0	43.2	41.6	35.2			
165			45.0	42.2	40.8	35.2			
170			43.6	41.2	40.2	35.2			
175			42.0	39.8	39.6	35.2	32.0		
180				38.4	39.0	35.0	31.6	28.4	
185				37.2	38.0	34.6	31.2	28.2	
190				35.8	36.6	34.0	30.6	27.8	
195					35.4	33.6	30.4	27.4	22.4
200					34.0	32.8	30.0	27.0	22.2
205					32.8	31.6	29.6	26.6	22.0
210					31.6	30.4	29.2	26.4	21.6
215					30.6	29.4	28.4	26.0	21.4
220						28.4	27.4	25.6	21.0
225						27.4	26.4	25.0	20.8
230							25.4	24.4	20.4
235							24.6	23.8	20.0
240							23.8	23.2	19.6
245							22.8	22.4	19.2
250							22.0	21.6	19.0
255							21.2	20.8	18.6
260								20.0	18.2
265								19.4	18.0
270									17.6
275									17.4
280									17.0
285									16.4

70°
179 ft.

82-240 ft.

100%
29'-2" spread

360°

352,700 lbs.

Pounds (thousands)

Feet	82'	101.7'	121.4'	141.1'	160.8'	180.5'	200.1'	219.8'	239.5'
120	57.0								
125	53.0	49.0							
130	51.0	47.0							
135	49.0	46.0							
140	47.0	43.8	41.4						
145		42.2	39.8	37.2					
150		40.6	38.4	36.0					
155		39.0	37.0	34.6					
160		37.4	35.6	33.4	34.6				
165			34.4	32.2	33.6				
170			33.0	31.0	32.6				
175			31.8	29.6	31.4	28.0			
180			30.6	28.0	29.6	26.6	25.2		
185				26.2	27.8	25.8	24.4	23.0	
190				25.0	26.6	25.0	23.8	22.4	
195				24.0	25.8	24.2	23.0	21.8	
200					25.0	23.4	22.4	21.2	19.6
205					24.2	22.8	21.6	20.6	19.2
210					23.4	22.0	21.0	20.0	18.6
215					22.6	21.4	20.4	19.4	18.2
220					21.8	20.6	19.8	18.8	17.6
225						20.0	19.2	18.2	17.2
230						19.2	18.6	17.6	16.6
235						18.6	18.0	17.2	16.2
240							17.4	16.6	15.6
245							16.8	16.2	15.2
250							16.2	15.6	14.6
255							15.6	15.2	14.2
260							15.0	14.6	13.8
265								14.2	13.2
270								13.6	12.8
275								13.2	12.4
280									12.0
285									11.6
290									11.2
295									10.8

THIS CHART IS ONLY A GUIDE AND SHOULD NOT BE USED TO OPERATE THE CRANE. The individual crane's load chart, operating instructions and other instructional plates must be read and understood prior to operating the crane.

Working Range
w/MegaWingLift

240 ft. Luffing Jib

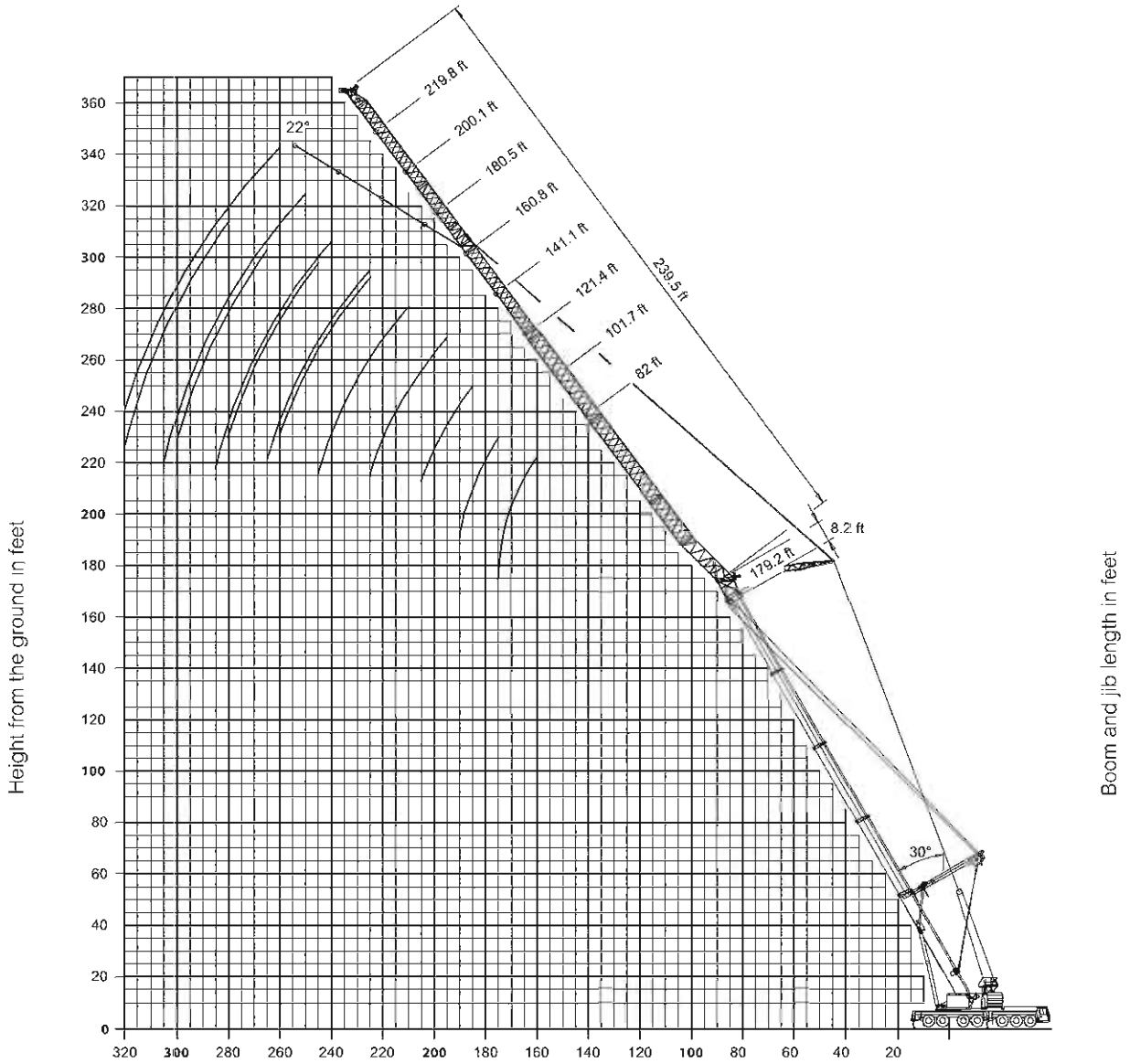

GMK 7550w/MWL

GROVE

THIS CHART IS ONLY A GUIDE AND SHOULD NOT BE USED TO OPERATE THE CRANE. The individual crane's load chart, operating instructions and other instructional plates must be read and understood prior to operating the crane.

60° 116 ft. | 82-240 ft. | 100% 29'-2" spread | 360° | 352,700 lbs.

Pounds (thousands)

Feet	82'	101.7'	121.4'	141.1'	160.8'	180.5'	200.1'	219.8'	239.5'
120	68.0								
125	65.0								
130	62.0								
135	60.0	58.0							
140		56.0							
145		54.0	53.0						
150		52.0	51.0						
155		50.0	49.0						
160			47.0	45.0					
165			45.0	43.6					
170			43.4	42.0					
175			41.6	40.4	39.4				
180				38.8	37.8				
185				37.4	36.4	35.0			
190				36.0	35.0	33.6			
195					33.8	32.4			
200					32.6	31.2	30.2		
205					31.4	30.0	29.0		
210						29.0	28.0	27.2	
215						27.8	27.0	26.2	
220						26.8	26.0	25.4	
225						26.0	25.0	24.4	21.4
230							24.2	23.6	20.8
235							23.4	22.6	20.4
240							22.4	21.8	20.0
245							21.6	21.0	19.6
250								20.4	19.2
255								19.6	18.8
260								19.0	18.4
265								18.2	17.8
270									17.2
275									16.6
280									16.0
285									15.4

60° 148 ft. | 82-240 ft. | 100° 29'-2" spread | 360° | 352,700 lbs.

Pounds (thousands)

Feet	82'	101.7'	121.4'	141.1'	160.8'	180.5'	200.1'	219.8'	239.5'
140	52.0								
145	50.0								
150	48.0								
155	46.0	44.0							
160		42.6							
165		40.8	39.6						
170		39.2	38.2						
175		37.6	36.6	35.0					
180			35.2	33.6					
185			34.0	32.4					
190			32.6	31.2					
195			31.4	30.0	29.0				
200				28.8	27.8				
205				27.8	26.8	25.6			
210					25.8	24.8			
215					24.8	23.8			
220					24.0	22.8	22.0		
225					23.0	22.0	21.0		
230						21.2	20.2	19.6	
235						20.4	19.6	18.8	
240						19.6	18.8	18.2	17.2
245						18.8	18.0	17.4	16.6
250							17.4	16.8	15.8
255							16.6	16.2	15.2
260							16.0	15.4	14.6
265							15.4	14.8	14.0
270								14.2	13.4
275								13.8	12.8
280								13.2	12.4
285								12.6	11.8
290									11.4
295									10.8
300									10.4

THIS CHART IS ONLY A GUIDE AND SHOULD NOT BE USED TO OPERATE THE CRANE. The individual crane's load chart, operating instructions and other instructional plates must be read and understood prior to operating the crane.

GROVE

load charts
w/MegaWingLift

60° 163 ft. | 82-240 ft. | 100% 29'-2" spread | 360° | 352,700 lbs.

Pounds (thousands)

Feet	82'	101.7'	121.4'	141.1'	160.8'	180.5'	200.1'	219.8'	239.5'
145	47.0								
150	45.0								
155	43.6								
160	41.8	40.4							
165		38.8							
170		37.2							
175		35.6	34.6						
180		34.2	33.2						
185			32.0	30.2					
190			30.8	29.2					
195			29.6	28.0					
200			28.4	27.0	26.4				
205				26.0	25.4				
210				25.0	24.4	22.8			
215				24.0	23.6	22.0			
220				23.0	22.6	21.2			
225					21.8	20.2	19.2		
230					21.0	19.6	18.6		
235					20.2	18.8	17.8		
240					19.4	18.0	17.0	16.2	
245						17.4	16.4	15.6	
250						16.6	15.8	15.0	13.8
255						16.0	15.2	14.4	13.2
260							14.6	13.8	12.6
265							14.0	13.2	12.2
270							13.4	12.6	11.6
275							12.8	12.2	11.0
280							12.2	11.6	10.6
285								11.0	10.2
290								10.6	9.6
295								10.2	9.2
300									8.8
305									8.2
310									7.8

60° 179 ft. | 82-240 ft. | 100° 29'-2" spread | 360° | 352,700 lbs.

Pounds (thousands)

Feet	82'	101.7'	121.4'	141.1'	160.8'	180.5'	200.1'	219.8'	239.5'
160	39.6								
165	38.0								
170	36.4								
175	34.8	33.4							
180		32.2							
185		31.0	29.0						
190		29.8	27.8						
195			25.8	23.2					
200			24.6	22.4					
205			23.6	21.6					
210				21.0	22.6				
215				20.2	21.8				
220				19.4	20.8				
225				18.8	20.0	18.6			
230					19.4	17.8			
235					18.6	17.0			
240					17.8	16.4	15.4		
245					17.2	15.8	14.6		
250						15.0	14.0	13.2	
255						14.4	13.4	12.6	
260						13.8	12.8	12.0	10.8
265						13.2	12.4	11.6	10.2
270							11.8	11.0	9.8
275							11.2	10.6	9.2
280							10.8	10.0	8.8
285							10.2	9.6	8.4
290								9.2	8.0
295								8.6	7.6
300								8.2	7.0
305								7.8	6.6
310									6.2
315									6.0
320									5.6

THIS CHART IS ONLY A GUIDE AND SHOULD NOT BE USED TO OPERATE THE CRANE. The individual crane's load chart, operating instructions and other instructional plates must be read and understood prior to operating the crane.

230 ft Lattice Extension

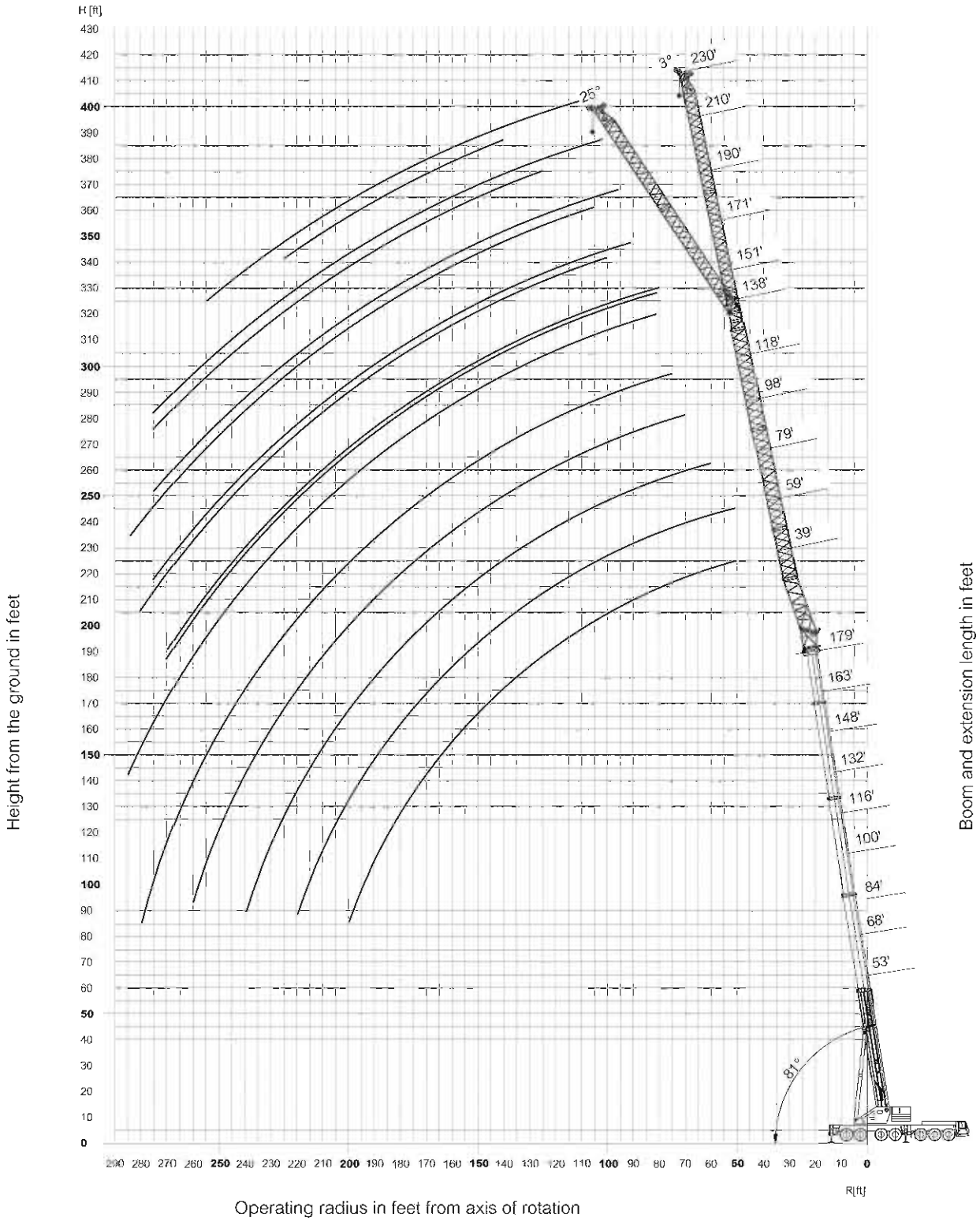

THIS CHART IS ONLY A GUIDE AND SHOULD NOT BE USED TO OPERATE THE CRANE. The individual crane's load chart, operating instructions and other instructional plates must be read and understood prior to operating the crane.

load charts

163 ft | 39 - 230 ft. | 264,500 lbs. | 100% 29' 2" Spread | 360°

Pounds (thousands)

Ft	163'															
Ft	39	59	79	98	118	138	151		171		190		210		230	
	3°	3°	3°	3°	3°	3°	3°	25°	3°	25°	3°	25°	3°	25°	3°	25°
45	105.0															
50	100.0	87.0														
55	96.0	83.0	66.0													
60	90.0	80.0	63.0	51.0												
65	85.0	77.0	61.0	49.0												
70	79.0	72.0	58.0	47.0	41.6											
75	74.0	68.0	56.0	45.0	40.0	33.8	28.2									
80	70.0	64.0	53.0	43.6	38.6	32.6	27.0	25.6	23.4							
85	66.0	61.0	51.0	42.0	37.2	31.4	26.0	24.4	22.6							
90	62.0	57.0	50.0	40.4	35.8	29.8	24.8	23.6	21.6		19.0					
95	58.0	54.0	48.0	39.0	34.4	28.4	23.8	22.6	20.8	18.6	18.2		15.4		13.0	
100	54.0	51.0	46.0	37.8	33.4	26.8	23.0	21.8	19.8	17.8	17.4	15.0	14.8		12.4	
105	52.0	49.0	45.0	36.6	32.2	25.8	22.0	21.0	19.2	17.2	16.8	14.4	14.2		12.0	
110	49.0	46.0	43.0	35.2	31.2	25.0	21.2	20.2	18.4	16.4	16.0	13.8	13.6		11.4	
115	46.0	44.0	41.4	34.0	30.0	24.2	20.4	19.4	17.6	15.8	15.4	13.2	13.2		11.0	
120	43.6	41.8	39.6	32.8	28.8	23.4	19.6	18.8	17.0	15.2	14.8	12.8	12.6	10.4	10.6	
125	41.0	39.8	37.8	31.6	27.6	22.4	18.8	18.0	16.2	14.6	14.2	12.2	12.0	10.0	10.2	
130	38.6	38.0	36.0	30.4	26.4	21.8	18.2	17.4	15.6	14.2	13.6	11.8	11.6	9.6	9.6	
135	36.6	36.0	34.2	29.2	25.2	21.2	17.6	16.8	15.0	13.6	13.0	11.2	11.0	9.0	9.2	7.4
140	34.6	34.2	32.6	28.0	24.2	20.4	17.0	16.2	14.4	13.2	12.4	10.8	10.6	8.6	8.8	7.0
145	32.6	32.4	30.8	26.8	23.6	19.8	16.4	15.6	14.0	12.6	12.0	10.4	10.2	8.4	8.4	6.6
150	30.6	30.6	29.0	25.8	23.0	19.2	15.8	15.2	13.4	12.2	11.6	10.0	9.6	8.0	8.2	6.4
155	28.6	29.0	27.4	25.0	22.4	18.6	15.2	14.6	13.0	11.8	11.0	9.6	9.2	7.6	7.8	6.0
160	26.6	27.4	25.6	24.0	21.6	18.2	14.8	14.0	12.4	11.4	10.6	9.2	8.8	7.2	7.4	5.8
165	25.0	26.0	24.4	23.2	21.0	17.6	14.2	13.6	12.0	11.0	10.2	8.8	8.4	7.0	7.0	5.4
170	23.0	24.4	23.4	22.2	20.4	17.2	13.8	13.2	11.6	10.6	9.8	8.6	8.0	6.6	6.6	5.2
175	21.2	22.8	22.4	21.2	19.8	16.6	13.4	12.8	11.2	10.2	9.4	8.2	7.8	6.4	6.4	4.8
180	19.4	21.2	21.4	20.4	19.2	16.2	12.8	12.4	10.8	9.8	9.0	8.0	7.4	6.0	6.0	4.6
185	17.8	19.6	20.2	19.6	18.4	15.8	12.4	12.0	10.4	9.6	8.6	7.6	7.0	5.8	5.6	4.4
190	16.4	18.0	19.2	18.6	17.8	15.4	12.0	11.6	10.0	9.2	8.4	7.2	6.8	5.6	5.4	4.0
195		16.4	18.2	17.8	17.2	15.0	11.6	11.2	9.6	8.8	8.0	7.0	6.4	5.2	5.2	3.8
200		15.0	16.8	17.0	16.6	14.6	11.4	11.0	9.2	8.6	7.8	6.8	6.0	5.0	4.8	3.6
205		13.8	15.4	16.0	15.8	14.2	11.0	10.6	9.0	8.2	7.4	6.6	5.8	4.8	4.6	3.4
210			14.2	15.2	15.0	13.8	10.6	10.2	8.6	8.0	7.2	6.2	5.6	4.6	4.2	3.2
215			12.8	13.8	14.4	13.4	10.2	10.0	8.4	7.8	6.8	6.0	5.4	4.4	4.0	3.0
220			11.8	12.6	13.6	12.8	10.0	9.6	8.0	7.4	6.6	5.8	5.0	4.2	3.8	2.8
225			10.6	11.6	12.4	12.2	9.6	9.2	7.8	7.2	6.2	5.6	4.8	4.0	3.6	2.6
230				10.4	11.4	11.6	9.0	8.8	7.4	7.0	6.0	5.4	4.6	3.8	3.4	
235				9.4	10.4	10.6	8.6	8.4	7.2	6.8	5.8	5.2	4.2	3.6	3.2	
240				8.4	9.4	9.6	7.6	8.0	6.8	6.4	5.6	5.0	4.0	3.4	3.0	
245					8.4	8.6	6.8	7.2	6.6	6.2	5.4	4.8	3.8	3.2	2.8	
250					7.4	7.8	5.8	6.2	6.2	6.0	5.2	4.6	3.6	3.0		
255					6.6	7.0	5.0	5.2	5.6	5.8	4.8	4.4	3.4	2.8		
260					5.8	6.0	4.0	4.4	4.8	5.4	4.6	4.2	3.4	2.6		
265						5.2	3.2	3.6	4.0	4.8	4.4	3.8	3.2	2.6		
270						4.4	2.6	2.8	3.2	4.0	3.8	3.6	3.0			
275						3.8			2.4	3.2	3.0	3.4	2.8			
280						3.0				2.4	2.2	3.2	2.4			
285												2.6				

THIS CHART IS ONLY A GUIDE AND SHOULD NOT BE USED TO OPERATE THE CRANE. The individual crane's load chart, operating instructions and other instructional plates must be read and understood prior to operating the crane.

179 ft | 39 - 230 ft. | 264,500 lbs. | 100% 29' 2" Spread | 360°

Pounds (thousands)

Ft	179'															
Ft	39.0	59.0	79.0	98.0	118.0	138.0	151		171.0		190.0		210.0		230.0	
	3°	3°	3°	3°	3°	3°	3°	25°	3°	25°	3°	25°	3°	25°	3°	25°
45																
50	87.0	78.0														
55	83.0	75.0														
60	80.0	72.0	60.0													
65	76.0	68.0	58.0													
70	72.0	65.0	56.0	47.0												
75	68.0	61.0	54.0	46.0	38.6											
80	65.0	58.0	52.0	44.0	37.4	31.4	25.8	24.6								
85	61.0	55.0	49.0	43.0	36.2	29.8	25.0	23.8								
90	57.0	52.0	47.0	41.6	35.0	28.2	24.2	22.8	20.8							
95	54.0	50.0	45.0	40.2	34.0	27.0	23.2	22.0	20.0		17.2					
100	51.0	47.0	43.4	38.8	32.8	26.2	22.4	21.2	19.4	17.4	16.6		13.8		11.6	
105	49.0	45.0	41.6	37.4	31.4	25.4	21.6	20.6	18.6	16.8	16.0	14.0	13.4		11.2	
110	46.0	43.0	39.8	35.8	30.2	24.6	20.8	19.8	18.0	16.2	15.6	13.4	13.0		10.8	
115	44.0	41.0	38.0	34.6	28.8	24.0	20.2	19.2	17.2	15.6	15.0	13.0	12.4		10.4	
120	41.8	39.2	36.4	33.2	27.6	23.2	19.4	18.6	16.6	15.0	14.4	12.4	12.0		10.0	
125	39.8	37.2	35.0	31.8	26.6	22.6	18.8	18.0	16.0	14.6	14.0	12.0	11.6	9.8	9.6	
130	37.8	35.4	33.6	30.6	25.8	21.8	18.2	17.4	15.4	14.0	13.4	11.6	11.2	9.4	9.2	
135	35.8	33.6	32.2	29.2	25.0	21.2	17.6	16.8	15.0	13.6	13.0	11.2	10.8	9.0	8.8	
140	34.0	31.8	30.6	27.8	24.2	20.6	17.0	16.2	14.4	13.0	12.4	10.8	10.4	8.6	8.4	6.8
145	32.0	30.0	29.2	26.6	23.4	20.0	16.4	15.6	14.0	12.6	12.0	10.4	10.0	8.2	8.2	6.4
150	30.4	28.2	28.0	25.2	22.6	19.4	16.0	15.2	13.4	12.2	11.4	10.0	9.6	7.8	7.8	6.2
155	28.8	26.4	26.6	23.8	21.8	18.8	15.4	14.8	13.0	11.8	11.0	9.6	9.2	7.6	7.4	6.0
160	27.2	25.0	25.2	22.6	21.0	18.2	14.8	14.2	12.4	11.4	10.6	9.2	8.8	7.2	7.2	5.6
165	25.6	24.0	23.8	21.6	20.2	17.6	14.4	13.8	12.0	11.0	10.2	9.0	8.4	7.0	6.8	5.4
170	24.0	22.8	22.4	20.8	19.4	17.2	13.8	13.4	11.6	10.6	9.8	8.6	8.2	6.6	6.6	5.0
175	22.2	21.8	21.2	20.0	18.6	16.6	13.4	13.0	11.2	10.2	9.6	8.2	7.8	6.4	6.2	4.8
180	21.0	20.8	20.4	19.2	17.8	16.0	13.0	12.6	10.8	10.0	9.2	8.0	7.4	6.0	6.0	4.6
185	19.2	19.6	19.4	18.4	17.2	15.4	12.6	12.2	10.4	9.6	8.8	7.6	7.2	5.8	5.8	4.4
190	17.6	18.6	18.6	17.4	16.6	14.8	12.0	11.8	10.2	9.4	8.4	7.4	6.8	5.6	5.4	4.2
195	16.2	17.2	17.6	16.6	15.8	14.4	11.6	11.4	9.8	9.0	8.2	7.2	6.6	5.4	5.2	3.8
200	14.8	15.8	16.8	16.0	15.2	13.8	11.2	11.0	9.4	8.8	7.8	6.8	6.2	5.2	5.0	3.6
205		14.4	15.8	15.2	14.6	13.2	10.6	10.6	9.2	8.4	7.6	6.6	6.0	4.8	4.6	3.4
210		13.2	14.6	14.6	13.8	12.8	10.2	10.2	8.8	8.2	7.4	6.4	5.6	4.6	4.4	3.2
215		12.0	13.4	13.8	13.2	12.2	9.8	9.8	8.4	7.8	7.0	6.2	5.4	4.4	4.2	3.0
220		10.8	12.2	13.0	12.8	11.6	9.2	9.2	8.2	7.6	6.8	6.0	5.2	4.2	4.0	2.8
225			11.2	12.0	12.2	11.2	8.8	8.8	7.8	7.4	6.6	5.8	5.0	4.0	3.6	2.8
230			10.0	10.8	11.6	10.6	8.4	8.4	7.4	7.0	6.2	5.4	4.8	3.8	3.4	
235			9.0	9.8	10.6	10.2	7.8	8.0	7.0	6.8	6.0	5.2	4.6	3.6	3.2	
240			8.2	8.8	9.6	9.6	7.4	7.6	6.6	6.4	5.6	5.0	4.2	3.4	3.0	
245				7.8	8.6	8.8	6.8	7.2	6.2	6.2	5.4	4.8	4.0	3.2	2.8	
250				7.0	7.8	7.8	5.8	6.2	5.8	5.8	5.0	4.6	3.8	3.2	2.6	
255				6.0	6.8	7.0	5.0	5.4	5.4	5.6	4.8	4.6	3.6	3.0	2.4	
260				5.2	6.0	6.2	4.2	4.4	4.8	5.2	4.4	4.4	3.2	2.8		
265					5.2	5.4	3.4	3.6	4.0	4.8	4.0	4.2	3.0	2.6		
270					4.4	4.6	2.6	2.8	3.2	4.0	3.6	3.8	2.8	2.6		
275					3.8	3.8			2.4	3.2	2.8	3.6	2.6	2.4		
280					3.0	3.2				2.4		3.2				
285						2.4						2.6				

THIS CHART IS ONLY A GUIDE AND SHOULD NOT BE USED TO OPERATE THE CRANE. The individual crane's load chart, operating instructions and other instructional plates must be read and understood prior to operating the crane.

working range

Special offset lattice extension

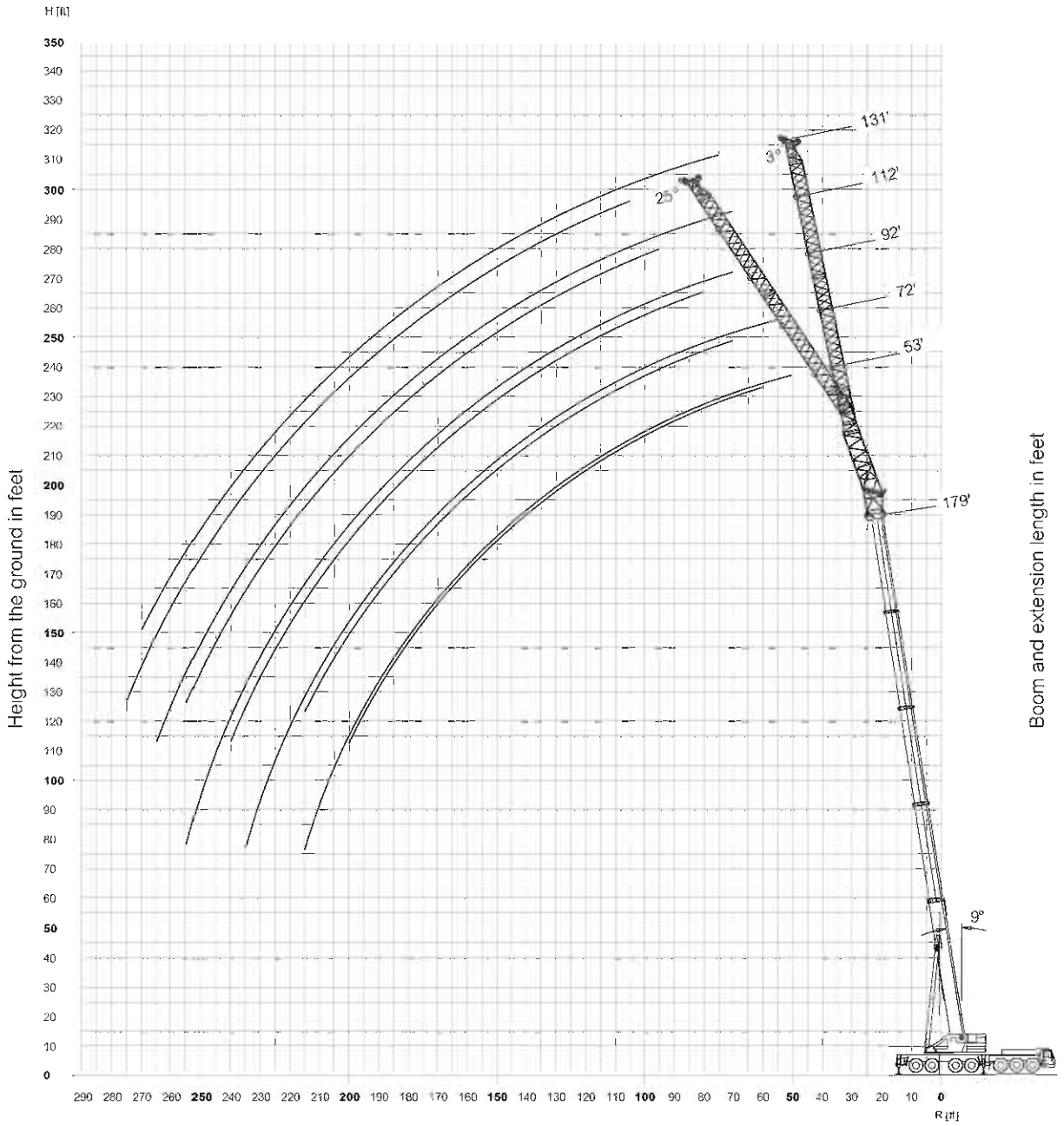

GMK 7550

GROVE

THIS CHART IS ONLY A GUIDE AND SHOULD NOT BE USED TO OPERATE THE CRANE. The individual crane's load chart, operating instructions and other instructional plates must be read and understood prior to operating the crane.

163 ft | 52.5 - 131.2 ft. | 264,500 lbs. | 100% 29' 2" Spread | 360°

Pounds (thousands)

Ft	163'									
Ft	52.5		72.2		91.9		111.6		131.2	
	3°	25°	3°	25°	3°	25°	3°	25°	3°	25°
45	97.0									
50	94.0		74.0							
55	88.0	79.0	71.0							
60	82.0	77.0	69.0		54.0		43.2			
65	78.0	74.0	66.0		52.0		41.6			
70	73.0	71.0	63.0	51.0	50.0		40.0		34.6	
75	69.0	67.0	61.0	49.0	48.0		38.4		33.2	
80	65.0	64.0	58.0	48.0	47.0	36.4	37.0		32.0	
85	61.0	60.0	55.0	46.0	45.0	35.4	35.6		30.6	
90	57.0	57.0	53.0	45.0	43.4	34.4	34.4	25.0	29.0	
95	54.0	53.0	50.0	43.6	42.0	33.4	33.2	24.4	27.4	
100	51.0	51.0	48.0	42.8	40.6	32.6	32.2	23.8	26.0	19.8
105	48.0	48.0	45.0	41.6	39.2	31.6	31.0	23.2	25.2	19.2
110	46.0	46.0	43.4	40.4	38.0	30.6	29.8	22.6	24.4	18.8
115	43.2	43.4	41.4	39.0	36.6	29.4	28.6	22.0	23.6	18.2
120	41.2	41.2	39.4	37.8	35.4	28.2	27.4	21.4	22.8	17.6
125	39.0	39.2	37.4	36.4	34.2	27.0	26.2	21.0	22.2	17.4
130	37.0	37.2	35.4	35.2	33.0	26.6	25.2	20.4	21.4	17.0
135	35.0	35.2	33.4	33.6	31.8	25.0	24.4	20.0	20.8	16.6
140	32.8	33.4	31.6	31.8	30.6	25.4	23.8	19.6	20.2	16.2
145	31.2	31.4	29.6	30.0	29.2	24.8	23.0	19.2	19.6	15.8
150	29.4	29.8	27.8	28.2	27.6	24.2	22.4	18.8	19.0	15.4
155	27.8	28.0	26.0	26.4	26.2	23.6	21.8	18.4	18.6	15.0
160	26.0	26.4	24.4	25.0	24.8	23.0	21.2	18.0	18.0	14.8
165	24.4	24.8	23.4	23.8	23.2	22.4	20.6	17.6	17.6	14.4
170	22.6	23.2	22.2	22.8	21.8	21.8	19.8	17.4	17.0	14.2
175	20.6	21.2	21.2	21.6	20.8	21.2	19.2	17.0	16.6	13.8
180	18.8	19.4	20.0	20.4	19.8	20.4	18.6	16.8	16.2	13.6
185	17.2	17.6	19.0	19.4	19.0	19.6	17.8	16.4	15.8	13.4
190	15.6	16.0	17.4	18.2	18.0	18.6	17.2	16.2	15.4	13.2
195	14.0		15.8	17.0	17.0	17.6	16.4	15.6	15.0	13.0
200	12.6		14.4	15.4	16.0	16.8	15.8	15.2	14.6	12.6
205			13.0		14.6	15.8	15.0	14.8	14.2	12.4
210			11.8		13.2	15.0	14.2	14.2	13.8	12.2
215			10.6		12.0	13.6	13.2	13.8	13.2	12.0
220			9.4		10.8	12.2	12.0	13.2	12.4	11.6
225					9.8		11.0	12.8	11.8	11.4
230					8.8		9.8	11.6	10.8	11.2
235					7.8		8.8	10.4	9.6	11.0
240					6.8		7.8	9.2	8.8	10.6
245							6.8		7.8	10.2
250							6.0		6.8	9.0
255							5.0		6.0	7.8
260							4.2		5.2	6.6
265									4.4	
270									3.6	
275										
280										

THIS CHART IS ONLY A GUIDE AND SHOULD NOT BE USED TO OPERATE THE CRANE. The individual crane's load chart, operating instructions and other instructional plates must be read and understood prior to operating the crane.

load charts

179 ft | 53 - 131ft. | 264,500 lbs. | 100% 29' 2" Spread | 360°

Pounds (thousands)

Ft	179'									
Ft	52.5		72.2		91.9		111.6		131.2	
	3°	25°	3°	25°	3°	25°	3°	25°	3°	25°
45										
50	81.0									
55	77.0		67.0							
60	73.0	71.0	65.0							
65	70.0	67.0	61.0							
70	66.0	64.0	58.0	50.0	49.0		40.4			
75	63.0	61.0	55.0	48.0	47.0		39.0		32.2	
80	59.0	57.0	53.0	47.0	46.0	36.0	37.8		30.8	
85	56.0	54.0	50.0	46.0	44.0	35.0	36.6		29.0	
90	53.0	52.0	48.0	44.0	42.6	34.2	35.6		27.6	
95	50.0	49.0	46.0	43.0	41.2	33.2	34.4	25.6	26.6	
100	47.0	47.0	43.6	41.6	39.6	32.4	33.4	25.0	25.8	
105	45.0	45.0	41.6	40.0	38.0	31.6	32.4	24.4	25.0	19.2
110	43.0	42.6	39.6	38.4	36.4	30.8	31.6	23.8	24.2	18.6
115	40.8	40.6	38.0	36.8	34.8	30.0	30.6	23.2	23.4	18.2
120	38.8	38.6	36.4	35.2	33.2	29.0	29.4	22.8	22.8	17.6
125	36.6	36.8	34.8	33.4	31.8	25.0	28.2	22.2	22.0	17.4
130	34.6	34.8	33.0	31.6	30.2	27.0	26.8	21.8	21.4	17.0
135	32.8	32.8	31.4	29.8	28.6	26.0	25.6	21.4	20.8	16.6
140	30.8	31.0	29.6	28.2	27.2	25.2	24.2	20.8	20.4	16.2
145	28.8	29.0	28.4	27.0	25.6	24.4	23.2	20.4	19.8	15.8
150	27.0	27.2	26.8	25.8	24.4	23.6	22.4	20.0	19.2	15.6
155	25.2	25.4	25.4	24.8	23.4	23.0	21.6	19.8	18.6	15.2
160	24.0	24.2	23.6	23.6	22.4	22.2	20.8	19.4	18.2	14.8
165	22.8	23.2	22.4	22.6	21.4	21.4	19.8	19.0	17.6	14.6
170	21.8	22.0	21.2	21.6	20.6	20.6	19.0	18.6	17.0	14.4
175	20.6	20.8	20.2	20.6	19.6	19.8	18.4	18.0	16.6	14.0
180	19.4	19.6	19.2	19.6	18.6	18.8	17.6	17.4	16.0	13.8
185	18.0	18.4	18.2	18.6	17.8	18.0	16.8	16.8	15.6	13.6
190	16.4	17.0	17.4	17.8	17.0	17.4	16.2	16.2	15.0	13.2
195	15.0	15.4	16.4	16.8	16.2	16.6	15.4	15.6	14.4	13.0
200	13.6	14.0	15.0	15.8	15.4	15.8	14.6	15.0	13.8	12.8
205	12.2		13.8	15.0	14.6	15.0	14.0	14.4	13.2	12.6
210	11.0		12.4	13.6	13.8	14.4	13.2	13.8	12.6	12.4
215	9.8		11.2	12.2	12.8	13.6	12.6	13.2	12.0	12.2
220			10.0		11.6	12.8	12.0	12.6	11.4	11.8
225			9.0		10.4	11.8	11.2	12.0	10.8	11.4
230			7.6		9.4	10.8	10.0	11.4	10.4	11.0
235			6.8		8.4	9.4	9.0	10.8	9.8	10.4
240					7.4	8.2	8.0	9.8	8.8	10.0
245					6.4		7.2	8.6	7.8	9.4
250					5.4		6.2	7.8	7.0	9.0
255					4.6		5.4	6.6	6.0	8.4
260							4.6		5.2	7.4
265							3.8		4.4	6.4
270									3.6	5.4
275										4.4
280										

THIS CHART IS ONLY A GUIDE AND SHOULD NOT BE USED TO OPERATE THE CRANE. The individual crane's load chart, operating instructions and other instructional plates must be read and understood prior to operating the crane.

Working Range
w/MegaWingLift

78.7 ft. Lattice Extension Jib

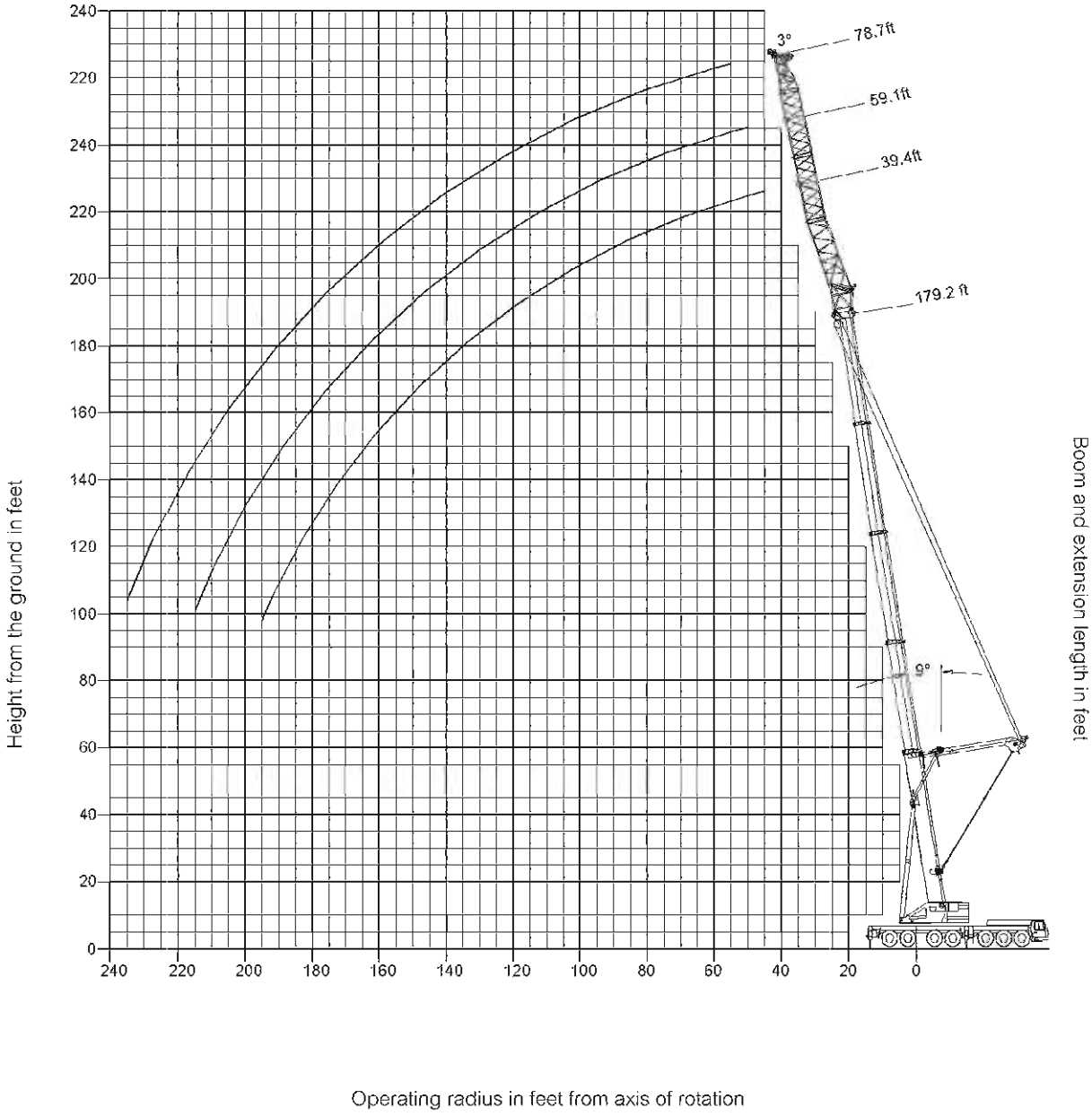

THIS CHART IS ONLY A GUIDE AND SHOULD NOT BE USED TO OPERATE THE CRANE. The individual crane's load chart, operating instructions and other instructional plates must be read and understood prior to operating the crane.

load charts
w/MegaWingLift

163-179 ft. | 39.4-78.7 ft. | 352,700 lbs. | 100° 29'-2" spread | 360°

Pounds (thousands)

Feet	163'			179'		
Feet	39.4'	59.1'	78.7'	39.4'	59.1'	78.7'
	3°	3°	3°	3°	3°	3°
40	114.0					
45	107.0	86.0		100.0		
50	100.0	81.0	66.0	94.0	78.0	
55	95.0	77.0	63.0	88.0	74.0	62.0
60	90.0	73.0	61.0	83.0	69.0	59.0
65	85.0	69.0	58.0	79.0	65.0	56.0
70	81.0	65.0	55.0	74.0	62.0	52.0
75	77.0	62.0	52.0	71.0	58.0	50.0
80	73.0	59.0	49.0	68.0	55.0	48.0
85	69.0	56.0	47.0	65.0	52.0	45.0
90	67.0	53.0	45.0	62.0	50.0	43.2
95	64.0	51.0	43.2	59.0	48.0	41.4
100	62.0	49.0	41.4	56.0	46.0	39.8
105	59.0	47.0	39.4	54.0	43.8	38.2
110	57.0	45.0	38.0	52.0	42.2	36.6
115	55.0	43.4	36.8	49.0	40.8	35.0
120	53.0	41.8	35.4	47.0	39.4	33.6
125	51.0	40.2	34.2	46.0	37.8	32.2
130	49.0	39.0	32.8	44.0	36.4	30.8
135	47.0	37.8	31.4	43.0	35.0	29.4
140	46.0	36.6	30.4	41.6	33.8	28.0
145	45.0	35.4	29.2	40.2	32.4	26.6
150	43.4	34.2	28.0	38.8	31.2	25.8
155	40.8	33.2	27.0	37.8	29.8	25.0
160	38.2	32.4	25.8	36.8	28.6	24.2
165	35.6	31.4	24.6	35.8	27.4	23.6
170	33.4	30.6	23.8	34.4	26.6	22.8
175	31.2	29.8	23.2	32.2	26.0	22.0
180	29.2	28.8	22.6	30.2	25.2	21.4
185		28.0	22.0	28.2	24.6	20.8
190		27.0	21.4	26.4	23.8	20.2
195		25.4	20.8	24.6	23.2	19.6
200		23.6	20.2		22.8	19.2
205			19.8		22.2	18.6
210			19.4		21.2	18.0
215			19.0		19.8	17.6
220			18.4			17.2
225						16.8
230						16.4
235						16.0

THIS CHART IS ONLY A GUIDE AND SHOULD NOT BE USED TO OPERATE THE CRANE. The individual crane's load chart, operating instructions and other instructional plates must be read and understood prior to operating the crane.

Heavy duty jib - 13 ft.

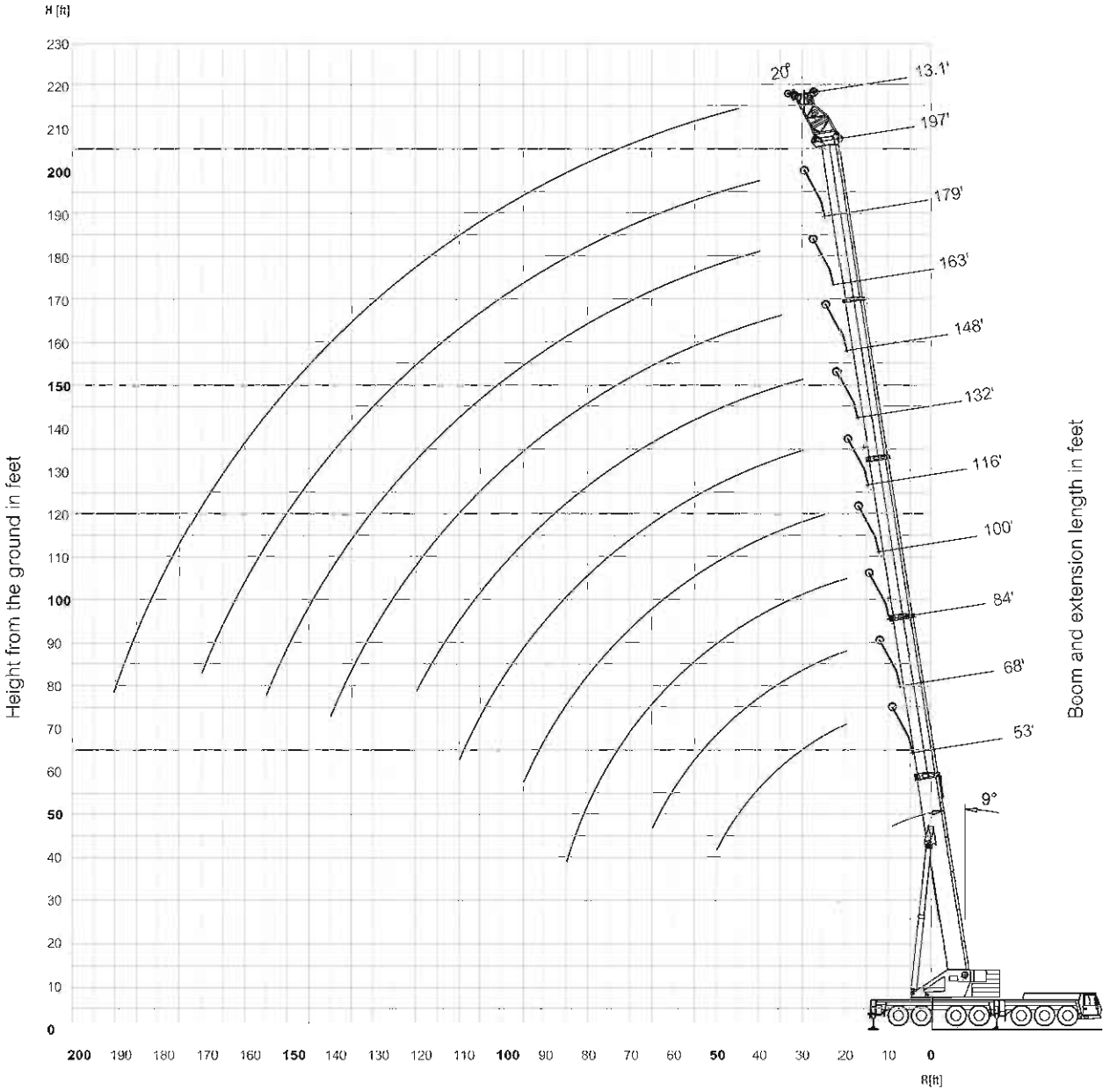

Operating radius in feet from axis of rotation

THIS CHART IS ONLY A GUIDE AND SHOULD NOT BE USED TO OPERATE THE CRANE. The individual crane's load chart, operating instructions and other instructional plates must be read and understood prior to operating the crane.

load charts

53-197 ft | 13.1 ft | 264,500 lbs. | 100% 29' 2" Spread | 360°

Pounds (thousands)

Ft	52.6	68.4	84.3	100.1	115.9	131.7	147.6	163.4	179.2	196.9
20	190.0	190.0	190.0							
25	190.0	190.0	190.0	190.0						
30	190.0	190.0	190.0	190.0	190.0	190.0				
35	190.0	190.0	190.0	190.0	190.0	182.0	166.0			
40	190.0	190.0	190.0	190.0	181.0	167.0	153.0	138.0	120.0	
45	190.0	190.0	190.0	185.0	164.0	151.0	140.0	129.0	116.0	104.0
50	190.0	190.0	187.0	170.0	151.0	140.0	130.0	121.0	109.0	99.0
55		171.0	169.0	156.0	138.0	129.0	120.0	113.0	102.0	94.0
60		154.0	151.0	143.0	128.0	118.0	110.0	105.0	96.0	89.0
65		138.0	135.0	132.0	119.0	109.0	102.0	98.0	91.0	84.0
70			120.0	121.0	110.0	102.0	95.0	91.0	85.0	79.0
75			107.0	108.0	103.0	95.0	88.0	85.0	80.0	74.0
80			96.0	97.0	97.0	88.0	82.0	79.0	75.0	71.0
85			86.0	88.0	88.0	83.0	77.0	74.0	71.0	67.0
90				79.0	80.0	78.0	73.0	70.0	67.0	63.0
95				72.0	73.0	74.0	69.0	66.0	63.0	60.0
100					66.0	68.0	64.0	62.0	60.0	56.0
105					60.0	62.0	61.0	58.0	57.0	53.0
110					55.0	57.0	58.0	55.0	54.0	49.0
115						52.0	54.0	52.0	51.0	47.0
120						48.0	50.0	49.0	48.0	45.0
125							46.0	47.0	45.0	42.6
130							42.2	45.0	43.4	40.4
135							39.0	41.2	41.4	38.2
140							36.0	38.2	39.4	36.2
145								35.4	37.4	34.4
150								32.8	34.8	32.8
155								30.4	32.4	31.0
160									30.2	29.2
165									28.0	27.4
170									26.2	25.6
175										24.4
180										22.6
185										21.0
190										19.4

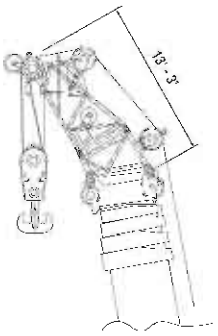

THIS CHART IS ONLY A GUIDE AND SHOULD NOT BE USED TO OPERATE THE CRANE. The individual crane's load chart, operating instructions and other instructional plates must be read and understood prior to operating the crane.

Heavy duty jib - 24 ft.

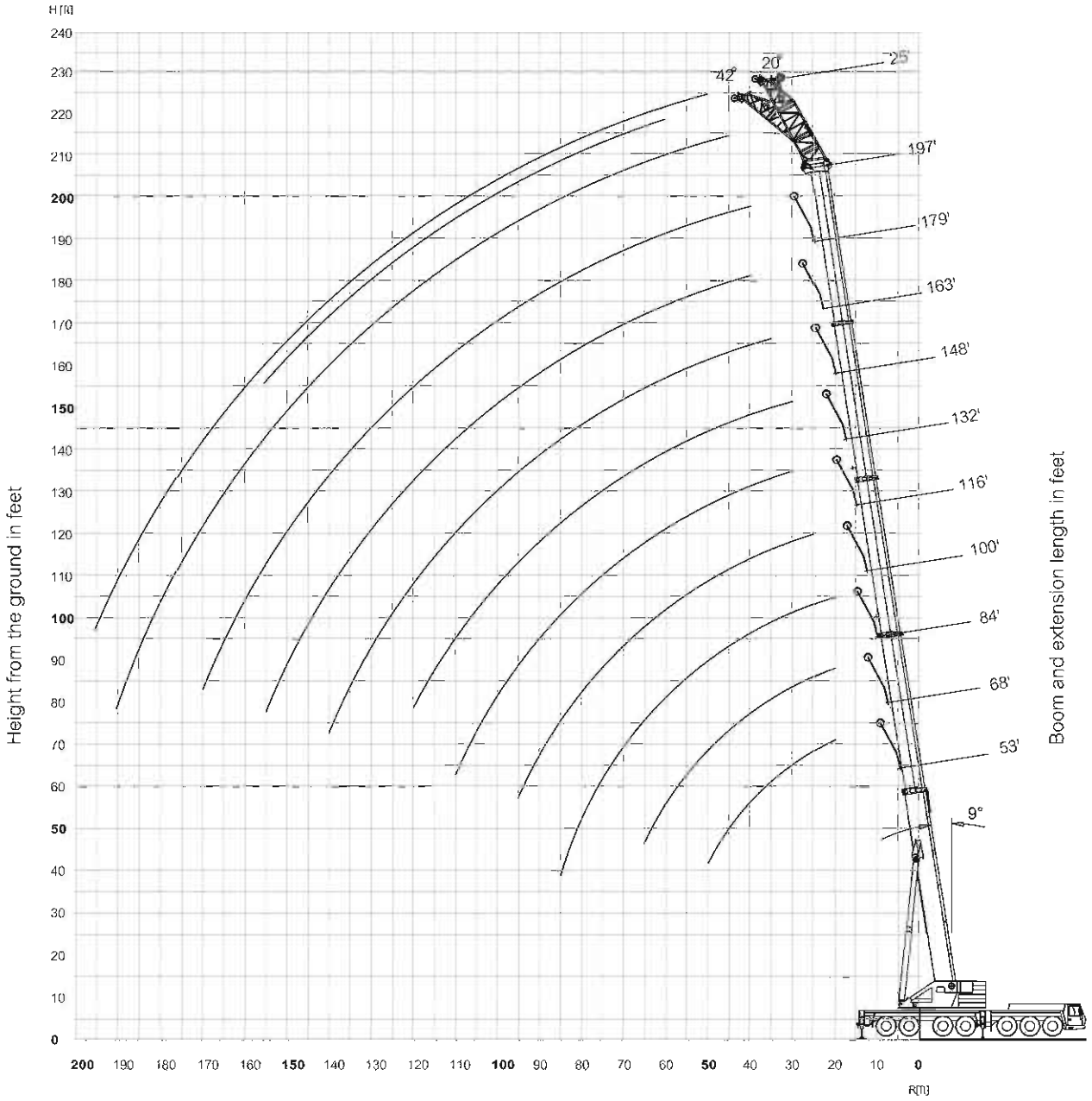

THIS CHART IS ONLY A GUIDE AND SHOULD NOT BE USED TO OPERATE THE CRANE. The individual crane's load chart, operating instructions and other instructional plates must be read and understood prior to operating the crane.

load charts

53-197 ft | 24.6 ft | 264,500 lbs. | 100% 29' 2" Spread | 360°

50

Pounds (thousands)

Ft	52.6		68.4		84.3		100.1		115.9		131.7		147.6		163.4		179.2		196.9	
	20°	42°	20°	42°	20°	42°	20°	42°	20°	42°	20°	42°	20°	42°	20°	42°	20°	42°	20°	42°
20	118.0		122.0																	
25	107.0	84.0	113.0	97.0	117.0															
30	100.0	89.0	106.0	93.0	110.0	95.0	114.0	96.0	115.0											
35	93.0	85.0	100.0	89.0	104.0	91.0	108.0	93.0	110.0	94.0	111.0									
40	88.0	81.0	94.0	85.0	99.0	88.0	103.0	90.0	105.0	91.0	107.0	92.0	106.0	92.0	104.0					
45	84.0	79.0	89.0	83.0	95.0	85.0	99.0	88.0	101.0	89.0	102.0	90.0	103.0	90.0	101.0		97.0			
50	79.0	77.0	85.0	80.0	91.0	83.0	95.0	85.0	98.0	87.0	100.0	88.0	100.0	87.0	99.0	87.0	95.0	84.0	88.0	
55	76.0		82.0	78.0	87.0	81.0	91.0	83.0	94.0	85.0	96.0	86.0	97.0	86.0	95.0	85.0	91.0	83.0	84.0	
60	75.0		79.0	77.0	83.0	79.0	88.0	81.0	91.0	83.0	93.0	84.0	94.0	84.0	91.0	83.0	87.0	82.0	80.0	78.0
65	74.0		76.0	76.0	81.0	78.0	85.0	80.0	88.0	81.0	91.0	82.0	92.0	83.0	87.0	82.0	83.0	80.0	76.0	75.0
70			75.0		79.0	77.0	82.0	78.0	86.0	80.0	88.0	81.0	87.0	80.0	83.0	80.0	78.0	76.0	72.0	72.0
75			75.0		76.0	76.0	80.0	78.0	83.0	79.0	85.0	80.0	82.0	78.0	79.0	78.0	73.0	72.0	68.0	68.0
80					74.0		78.0	77.0	80.0	77.0	81.0	77.0	78.0	75.0	75.0	74.0	69.0	69.0	65.0	65.0
85					74.0		76.0	76.0	78.0	75.0	77.0	74.0	73.0	73.0	70.0	70.0	66.0	65.0	61.0	61.0
90					74.0		74.0	76.0	75.0	73.0	73.0	72.0	69.0	69.0	66.0	66.0	62.0	62.0	58.0	58.0
95							73.0		72.0	71.0	69.0	69.0	65.0	65.0	62.0	63.0	58.0	59.0	54.0	55.0
100							68.0		68.0		65.0	66.0	61.0	61.0	59.0	60.0	55.0	56.0	52.0	52.0
105							62.0		62.0		62.0	62.0	57.0	57.0	56.0	56.0	53.0	53.0	49.0	49.0
110							56.0		57.0		58.0	59.0	53.0	54.0	52.0	53.0	50.0	50.0	47.0	47.0
115									52.0		54.0		51.0	51.0	49.0	50.0	48.0	48.0	44.0	45.0
120									48.0		49.0		48.0	49.0	47.0	47.0	45.0	45.0	42.0	42.4
125											45.0		46.0		44.0	45.0	42.8	43.0	40.0	40.4
130											41.4		42.8		42.2	42.4	40.4	40.8	38.2	38.6
135											38.0		39.4		40.2	40.2	38.4	39.0	36.2	36.6
140													36.4		38.0		36.4	37.2	34.4	34.8
145													33.4		35.4		34.4		32.6	32.8
150													30.6		32.8		32.4		30.8	31.0
155															30.2		30.4		29.2	29.4
160															27.8		28.4		27.6	
165																	27.0		26.2	
170																	25.2		24.6	
175																	23.4		23.0	
180																	21.6		21.4	
185																			19.8	
190																			18.2	
195																			16.8	

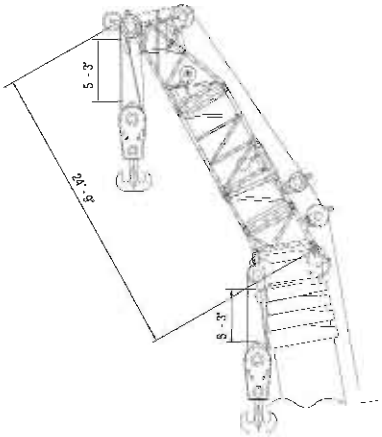

GMK7550

GROVE

THIS CHART IS ONLY A GUIDE AND SHOULD NOT BE USED TO OPERATE THE CRANE. The individual crane's load chart, operating instructions and other instructional plates must be read and understood prior to operating the crane.

Working Range
w/MegaWingLift

Heavy Duty Jib 13 ft.

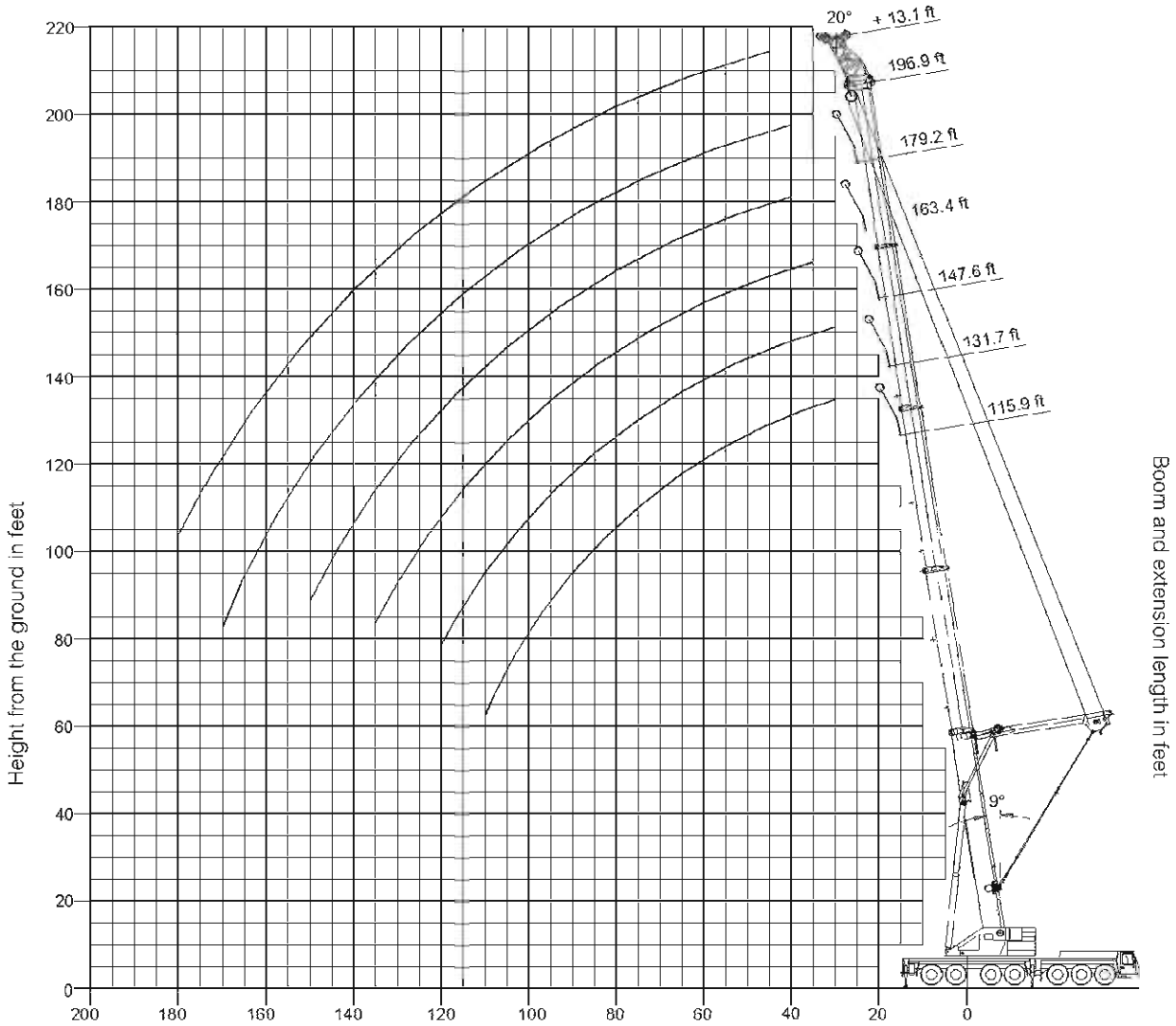

Operating radius in feet from axis of rotation

THIS CHART IS ONLY A GUIDE AND SHOULD NOT BE USED TO OPERATE THE CRANE. The individual crane's load chart, operating instructions and other instructional plates must be read and understood prior to operating the crane.

load charts
w/MegaWingLift

116-197 ft. | 13.1 ft. | 352,700 lbs. | 100% 29'-2" spread | 360°

Pounds (thousands)

Feet	116'	132'	148'	163'	179'	197'
Feet	13.1'	13.1'	13.1'	13.1'	13.1'	13.1'
	20°	20°	20°	20°	20°	20°
30	190.0	190.0				
35	190.0	190.0	190.0			
40	190.0	190.0	190.0	171.0	148.0	
45	190.0	190.0	188.0	162.0	139.0	128.0
50	187.0	186.0	175.0	154.0	132.0	121.0
55	173.0	175.0	165.0	146.0	125.0	115.0
60	157.0	159.0	155.0	140.0	119.0	109.0
65	143.0	145.0	145.0	134.0	113.0	104.0
70	131.0	133.0	134.0	128.0	108.0	99.0
75	120.0	123.0	123.0	122.0	103.0	95.0
80	111.0	113.0	113.0	115.0	99.0	91.0
85	102.0	104.0	104.0	106.0	95.0	88.0
90	94.0	97.0	97.0	99.0	91.0	84.0
95	88.0	90.0	90.0	92.0	87.0	81.0
100	81.0	84.0	84.0	86.0	84.0	78.0
105	76.0	78.0	78.0	80.0	81.0	76.0
110	69.0	73.0	73.0	75.0	76.0	73.0
115		68.0	68.0	70.0	72.0	70.0
120		63.0	63.0	66.0	67.0	68.0
125			59.0	61.0	63.0	63.0
130			55.0	57.0	59.0	59.0
135			51.0	54.0	55.0	56.0
140				50.0	52.0	52.0
145				47.0	49.0	49.0
150				44.0	46.0	46.0
155					43.0	43.2
160					40.6	40.6
165					38.2	38.2
170					35.2	36.0
175						33.8
180						31.8

THIS CHART IS ONLY A GUIDE AND SHOULD NOT BE USED TO OPERATE THE CRANE. The individual crane's load chart, operating instructions and other instructional plates must be read and understood prior to operating the crane.

Working Range
w/MegaWingLift

Heavy Duty Jib 24.6 ft.

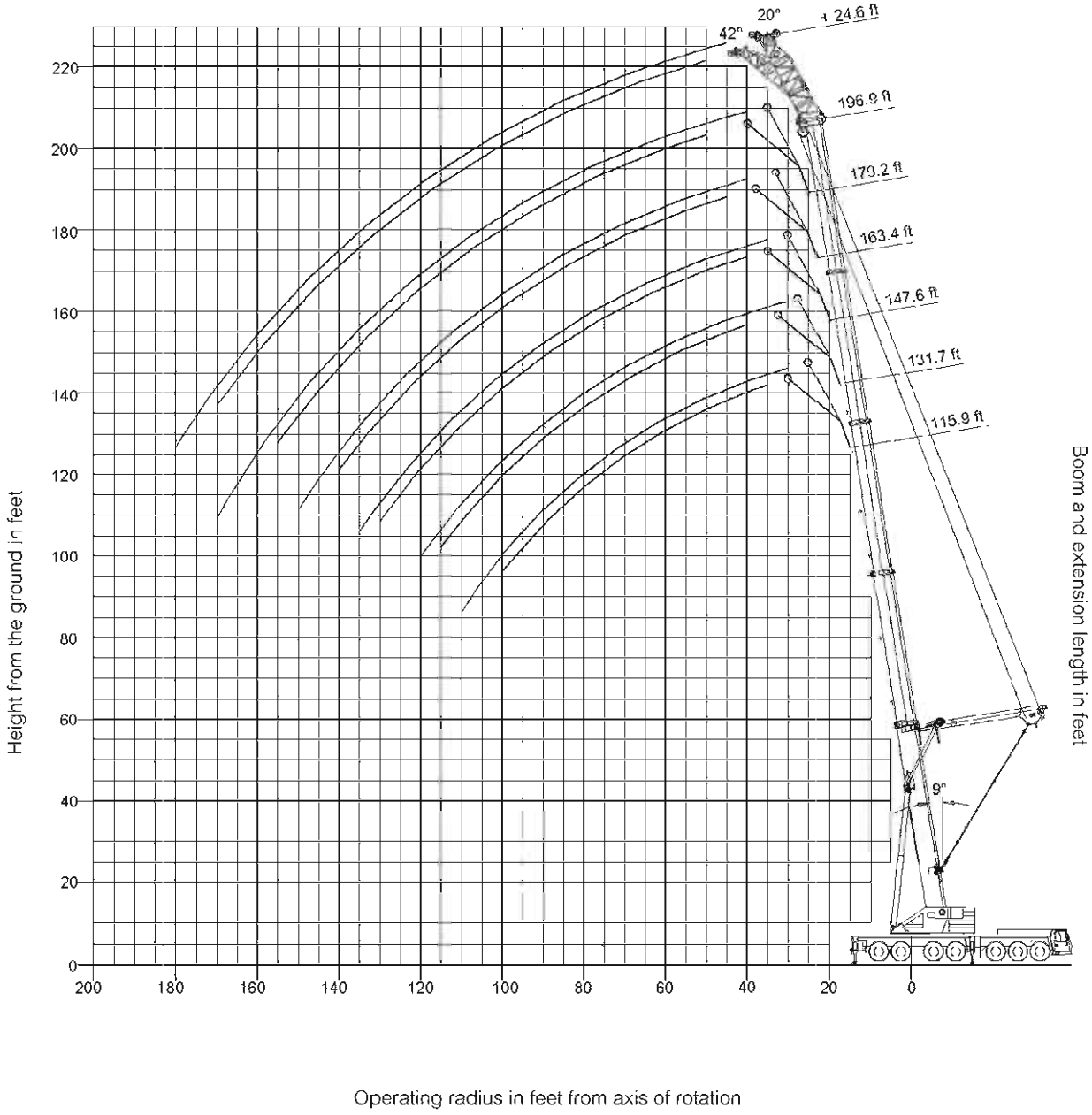

THIS CHART IS ONLY A GUIDE AND SHOULD NOT BE USED TO OPERATE THE CRANE. The individual crane's load chart, operating instructions and other instructional plates must be read and understood prior to operating the crane.

load charts
w/MegaWingLift

116-197 ft. | 24.6 ft. | 352,700 lbs. | 100% 29'-2" spread | 360°

Pounds (thousands)

Feet	116'		132'		148'		163'		179'		197'	
	20°	42°	20°	42°	20°	42°	20°	42°	20°	42°	20°	42°
30	148.0	114.0	147.0									
35	140.0	110.0	140.0	109.0	138.0	107.0						
40	133.0	106.0	132.0	105.0	131.0	104.0	123.0	100.0	113.0			
45	126.0	102.0	126.0	101.0	125.0	100.0	117.0	96.0	108.0	90.0		84.0
50	120.0	99.0	120.0	98.0	119.0	97.0	111.0	93.0	102.0	87.0	95.0	81.0
55	115.0	96.0	115.0	95.0	114.0	94.0	106.0	89.0	97.0	83.0	91.0	78.0
60	110.0	93.0	110.0	93.0	110.0	91.0	101.0	86.0	93.0	80.0	86.0	75.0
65	106.0	91.0	106.0	90.0	105.0	89.0	97.0	84.0	89.0	77.0	83.0	72.0
70	102.0	88.0	102.0	88.0	101.0	86.0	94.0	81.0	85.0	74.0	79.0	69.0
75	98.0	86.0	98.0	86.0	97.0	84.0	90.0	78.0	81.0	72.0	75.0	67.0
80	95.0	84.0	95.0	84.0	94.0	82.0	86.0	76.0	78.0	69.0	72.0	65.0
85	92.0	83.0	92.0	82.0	91.0	80.0	84.0	74.0	75.0	67.0	70.0	63.0
90	89.0	81.0	89.0	80.0	88.0	78.0	81.0	72.0	72.0	65.0	67.0	61.0
95	86.0	80.0	86.0	78.0	86.0	76.0	78.0	70.0	69.0	63.0	65.0	59.0
100	82.0		84.0	77.0	83.0	75.0	75.0	68.0	67.0	62.0	62.0	57.0
105	77.0		79.0	74.0	79.0	74.0	73.0	67.0	65.0	60.0	60.0	55.0
110	71.0		74.0	69.0	74.0	70.0	71.0	66.0	62.0	58.0	58.0	54.0
115	66.0		68.0		69.0	65.0	69.0	64.0	60.0	56.0	56.0	52.0
120	61.0		64.0		64.0	60.0	66.0	62.0	58.0	55.0	54.0	50.0
125			59.0		59.0	56.0	61.0	58.0	57.0	53.0	52.0	49.0
130			55.0		55.0		57.0	54.0	55.0	52.0	51.0	48.0
135			51.0		52.0		53.0	51.0	53.0	50.0	49.0	47.0
140					48.0		50.0		51.0	49.0	48.0	46.0
145					45.0		47.0		48.0	46.0	47.0	45.0
150					41.8		43.6		45.0	43.0	45.0	43.0
155							40.8		42.4		42.6	40.4
160							38.0		39.8		40.0	37.8
165									37.2		37.4	35.4
170									35.0		35.0	
175									32.8		32.8	
180											30.8	
185											28.8	
190											27.0	
195											25.2	

THIS CHART IS ONLY A GUIDE AND SHOULD NOT BE USED TO OPERATE THE CRANE. The individual crane's load chart, operating instructions and other instructional plates must be read and understood prior to operating the crane.

Notes

Symbols glossary

- Axle load
- Boom elevation
- Boom telescoping
- Brakes
- Cab
- Counterweight
- Crane functions
- Crane travel
- Electrical Systems
- Engine
- Fixed swingaway
- Frame
- Fuel tank capacity
- Gear
- Gradeability
- Heavy duty jib
- Main hoist
- Auxiliary hoist
- Hook height
- Lattice extension
- Lights
- Luffing jib
- Main boom
- Off road
- Oil
- Outriggers
- Outrigger controls
- Radius
- Rotation
- Speed
- Steering
- Suspension
- Swing
- Tele-swingaway
- Tires
- Transmission
- mph Travel speed

Manitowoc Cranes, Inc.
P.O. Box 70
Manitowoc, WI, USA 54221-0070
Telephone 920-684-6621
Facsimile 920-683-6277

Grove Worldwide
1565 Buchanan Trail East
Shady Grove, PA 17256 U.S.A.
Telephone: 717-597-8121
Facsimile: 717-597-4062

www.manitowoccranegroup.com

Distributed By:

Manitowoc Crane CARE

Constant improvement and engineering progress make it necessary that we reserve the right to make specification, equipment, and price changes without notice. Illustrations shown may include optional equipment and accessories, and may not include all standard equipment.

0206-2M Printed in USA Part No. 02-413 Manitowoc Crane Group 2006